STATE LIBRARY OF PENNSYLVANIA
3 0144 00336023 7

S
620.6
En31p
v.9

PROCEEDINGS

OF

ENGINEERS' SOCIETY OF WESTERN PENNSYLVANIA.

PITTSBURG, PA.

VOL. IX.

1893.

Digitized by the Internet Archive
in 2018 with funding from
This project is made possible by a grant from the Institute of Museum and Library Services as administered by the Pennsylvania Department of Education through the Office of Commonwealth Libraries

https://archive.org/details/vol9proceedingso00engi

CONTENTS.

	PAGE
Thirteenth Annual Meeting,	9
Report of Treasurer,	9
Report of Secretary,	11
Report of Board of Direction,	17
Report of Library Committee,	18
Report of Committee on Rooms,	22
Report of Committee on Programme,	23
President's Address,	24
First Annual Meeting of the Chemical Section,	36
Secretary's Report,	36
Address to the Chemical Section,	37
Sulphur in Pig-Iron,	45
Discussion on Sulphur Determination,	48
The Construction and Maintenance of Howe Truss Bridges. By Charles H. Nichols, C.E.,	53
Discussion of Nichols's Paper,	66
Segregation in Steel. By Walter E. Koch,	74
Discussion of Koch's Paper,	76
The Use of Bone-Black in Domestic Filters. By R. N. Clark,	78
Discussion of Clark's Paper,	85
A Note on Pin-Plates. By Thomas H. Johnson,	94
Discussion of Johnson's Paper,	102
Note on Segregation in Steel. By F. H. Williams,	107
The Water-Supply of Pittsburg and Allegheny City. By James H. Harlow,	109
Foundations. By W. G. Wilkins,	125
Discussion of Wilkins's Paper,	134
An Improperly Designed Chimney. By Gustave Kaufman, C.E.,	139
Discussion of Kaufman's Paper,	149
Notes on the Purification of Allegheny River Water by the Anderson Process. By Francis C. Phillips,	150
Discussion of Phillips's Paper,	160
Water Supply of the Oliver Coke Works. By G. S. Davison,	164
Discussion of Davison's Paper,	169
A Rapid Method for the Determination of Nickel in Steel. By A. T. Eastwick,	170
Discussion of Eastwick's Paper,	173
Determination of Tungsten in Steel. By Philo Kemery,	173
Discussion of Kemery's Paper,	175
Interpretation of Results of Analyses of Allegheny River Water as Supplied to Pittsburg. By James O. Handy,	176

56530

PAGE
Gas and Gas-Producers. By Walter E. Koch, ... 184
Discussion of Koch's Paper, ... 194
The Effect of Suddenly-Applied Loads upon the Tensile Strength, and Other Physical Properties of Wrought-Iron and Steel. By E. D. Estrada, . 196
Discussion of Estrada's Paper, ... 223
Dynamite Analysis. By James O. Handy, ... 230
Estimation of Sugar in the Presence of Sodium Nitrate and Traces of Nitro-Glycerine. By James O. Handy. 231
Phosphorus Determination. By James O. Handy and G. O. Loeffler, . . 232
Some Sources of Error in Phosphorus Determinations. By Alex. G. McKenna, 233
Some Applications of Natural Gas in Chemical Work. By Francis C. Phillips, Ph.D., ... 235
Precipitation by Air or Gas Blast. By R. B. Carnahan, Jr., ... 236
Further Discussion of Koch's and Estrada's Papers, ... 237
Natural Filtration for Domestic Water-Supply. By G. Kaufman, . . . 259
Discussion of Kaufman's Paper, ... 271
To Extinguish Oil-Fires. By S. M. Wickersham, ... 279
Discussion of Wickersham's Paper, ... 281
Standard Methods for the Analysis of Iron and Steel. By C. B. Dudley, Ph.D., 282
Discussion of Dudley's Paper, ... 301
The Metric System. By George H. Paine, ... 316
Indifference to Boiler-Firing and Management. By D. Ashworth, . . . 319
Discussion of Ashworth's Paper, ... 324
Further Discussion of Estrada's Paper, ... 326
Discussion on Adoption of Metric System, ... 348
A Proposed Method of Increasing at Critical Times the Navigable Depth of the Upper Ohio River by Artificial Means. By Thomas P. Roberts, . 353
Discussion of Roberts's Paper, ... 371
The Exact Determination of Phosphorus by a Molybdate Method in Iron, Steel, and Ores which Contain Arsenic. By James O. Handy, . . 377
Discussion of Handy's Paper, ... 381
List of Officers and Committees, ... 385
List of Members, ... 387
List of Exchanges, ... 407
Journals Subscribed for, ... 411

ENGINEERS' SOCIETY OF WESTERN PENNSYLVANIA.

This Society does not hold itself responsible for the opinions of its members.

THIRTEENTH ANNUAL MEETING.

PITTSBURG, JANUARY 17TH, 1893.

THE thirteenth annual meeting of the Society was held on the evening of January 17th, in the parlor of the Academy of Science and Art, Fifth Street.

Mr. Alfred E. Hunt was in the chair; Mr. R. Clark, Secretary; 59 members were present.

The minutes of the last annual meeting were read and approved.

The reports of the following officers and committees were read and approved:

REPORT OF TREASURER.

For the Year ending January 17, 1893.

RECEIPTS.

1892. January 19.

Balance,	$246.56
Dues for year ending Jan., 1889 (1),	5.00
" " " 1890 (1),	5.00
" " " 1891 (14),	70.00
" " " 1892 (44),	220.00
" " " 1893 (365),	1825.00
" half-year ending Jan., 1892 (26),	65.00
Dues in advance to Jan., 1900 (1),	35.00
Rent of desk-room,	60.00
Part payment of cost of engravings, etc., paid by writers of papers,	53.12
From sales of *Transactions*,	25.76
Postage refunded by Banquet Com.,	7.00
Transferred from W. F. Fund,	41.86
Transferred from Library Fund,	46.80
	$2706.10

Expenditures.

Transactions:			
Printing and binding,		$689.80	
Stenographer,		88.50	
Expense Committee on R. R. Joints,		19.81	
Engravings, plates, etc.,		108.30	
			$906.40
Library:			
Periodicals,		$115.05	
Binding,		154.10	
Cases and shelving,		118.65	
Supplies, card catalogues, etc.,		40.99	
			428.89
Rent of Rooms,			300.00
Office:			
Salary, Secretary for 1891,	$100.00		
" Curator,	175.00		
		275.00	
Desk for Secretary,		13.00	
Insurance,		20.00	
Commission and Salary of Collector,		68.27	
Printing,		104.15	
Postage and Expense,		329.14	
Telephone,		21.00	
			830.56
			$2465.86
Balance,			240.24
			$2706.10

Respectfully submitted,

A. E. Frost,
Treasurer.

REPORT OF THE SECRETARY.

Mr. President and Members of the Engineers' Society of Western Pennsylvania:

I herewith submit my annual report for the year 1892:

After correction, our roll of members on January 20, 1892, numbered,	324
Admitted during the year,	116
Making an aggregate of	440
Four members have died, ten have resigned since last report,	14
Our membership is,	426

Our death-roll has been increased by the names of B. L. Wood, Jr., William Thaw, Jr., James Morgan, C. J. Dixon.

One hundred and forty-two applicants were elected to membership; of these 116 qualified. Of the 116, 57 are engineers, or managers of large industrial establishments; 51 are chemists; 5 are specialists; 2 unclassified.

In 1891, 37 members were added to the roll.

Ten regular meetings were held, at which the following papers or reports were read:

January. Election of Officers and reading of Annual Reports.

February. William Metcalf, "On Smoke."

March. Discussion of paper, "On Smoke."

April. George S. Davison, "On Discharge Observations, on Streams."

May. J. W. Seaver on "Iron Mill Buildings."

June. Report read by W. Lucien Scaife, "On Some Data on Rail-Joints."

September. G. Kauffman, on "Reconstruction of the Ninth Street Bridge, Pittsburg."

October. G. H. Hutchinson, on "Mill Building Construction with Details from Practice."

November. Report of Committee on Smoke.

December. William L. Coffin, Jr., on "The Construction of Iron and Steel Tanks."

The annual dinner was held at the Duquesne Club, on January 28th; 103 members and guests were present. The menu was printed on sheets of aluminum.

During the past year the Chemical Section was organized. Its success was immediate; about seventy of our members give special attention to its meetings and papers. The details of this Section will be covered by the annual report of its Secretary, Mr. James O. Handy, to whose laborious work so much of its strength is due.

This Section was organized on the plan that our Society recognizes no difference in membership. All of our members are invited by notices to be present at the regular meetings, held on the third Tuesday of each month and at the meetings of the Chemical Section held on the fourth Tuesday. At the meetings held on the third Tuesdays, papers especially interesting in the lines of general engineering are read and discussed; on the fourth Tuesdays, papers especially interesting to those engaged in laboratory practice and to the chemical composition of materials.

Chemists need the papers read at our regular meetings to assist them to understand why certain conditions are necessary. Without correct chemical information any advance in engineering is impossible.

Our Society can not maintain its high position without its papers cover these two fields of work. The gratifying increase of its strength is due in great part to the organization and work of this Section.

On December the 28th and 29th The American Chemical Society met in joint session with our Chemical Section, as our guests, and by permission of the Academy of Science and Art.

Since April last our financial condition has received most careful consideration; a comparison was finally made of the charges for initiation and annual dues of local Engineering Societies which could be reached by correspondence and our own. It was found that our charges were the lowest on the roll. After lengthy dis-

cussion by the Board of Direction you were requested to give your opinion on this subject by filling a postal card which was mailed to you for the purpose enclosed in a circular covering briefly a statement of the case. The result was that out of 190 returns received, 75 favored the increase of our annual dues to seven dollars. At the December meeting the Society by a vote of 44 to 2 amended By-Law III. so that in the future the initiation fee shall be five dollars, the annual dues for members residing in Allegheny County, Pennsylvania, seven dollars, for non-resident members, five dollars.

It is expected that this change will increase our income about seven hundred dollars, a sum which will relieve your board in regard to many rulings which it was forced to establish on the score of economy but which bordered on penuriousness, and permit the Library Committee to bind regularly all journals and periodicals, but which will not permit the purchase of standard books of which we are so greatly in need.

Now that so much more activity is being shown by our members; so very many more consult our library; and since we have just received into membership a large number of men still young in their professional life, incapable to-day of purchasing many necessary books, it is hoped that our older members will raise a fund for this purpose. Six hundred dollars can be judiciously expended to-day for our Library.

In order to add to the appearance and permanency of our printed papers, it has been decided that in the future the Society will issue ten publications a year, suitably bound in a distinctive paper cover. Each issue will probably cover two papers, one read before a regular meeting and one before the Chemical Section. To meet this additional cost a number of paid advertisements have been obtained; these will be on separate pages and will not interfere with the making up of our annual volume of *Transactions*, nor with the printing and mailing of any paper before it is read. The board still insists that by this last method only a full and competent discussion of a paper can be obtained.

A Historical Sketch of the Engineers' Society of Western Pennsylvania.*

In 1879 James H. Harlow, for so many years your Secretary, determined that it would be well to organize a local Society of Engineers in Pittsburg. He thought the best way to accomplish this was by writing letters to very many of the engineers resident in this vicinity. We have on file copies of the replies of many to whom he wrote. Mr. Harlow's letter was to this effect (at that time Mr. Harlow was United States Assistant Engineer, and under Captain F. A. Mahan, U. S. A., in charge of the construction of Davis Island Dam):

U. S. Engineer's Office, Pittsburg, Nov. 25th, 1879.

Dear Sir:

What do you think of the advisability of organizing a club composed of those interested in engineering and residing in Pittsburg and vicinity. Will you please send me your views on the subject.

Truly yours,
James H. Harlow,
Ass. Eng. Davis Island Dam.

In all answers received the advice was given to go ahead. Mr. Harlow went ahead, and through his efforts the Society was started.

The first meeting was held at the office of Alexander Dempster, City Engineer of Pittsburg, on December 18, 1879. Among the forty present were: William Metcalf, Alexander Dempster, Jacob Reese, A. Gottlieb, Jesse W. Walker, James Park, Jr., Thomas Rodd, C. W. Haines, Charles Davis, William Kent, Charles Ackenhiel, W. F. Zimmerman, William Martin, and James H. Harlow.

The meeting was called to order by Mr. Harlow, who nominated Mr. William Metcalf as Chairman. Mr. Harlow acted as Secretary. At the request of those present, Mr. Harlow read a

* Much of the information contained in this sketch was obtained from Mr. James H. Harlow, who was our Secretary from 1884 to 1885 and during 1891, and from Mr. S. M. Wickersham, our Secretary from 1885 to 1891.

form of Constitution and By-Laws. These were referred to a committee.

At the next meeting, held January 8, 1880, in the Common Council Chamber of Pittsburg, the Committee on Constitution and By-Laws reported in full, and the report was accepted. On this date the title of our Society was adopted and the following officers were elected:

William Metcalf, President.

James H. Harlow, Secretary.

William Kent, Treasurer.

On March 20, 1880, by motion of Marcus A. Woodward, Esq., before the Court of Common Pleas No. 1 of Allegheny County, Pa., Edwin S. Stowe, presiding judge, granted charter. The applicants for our charter were: William Metcalf, A. Gotleib, Thomas Road, E. M. Butz, N. M. McDonald, William Kent, and James H. Harlow.

From its inception to the present day, much of its success and standing is due to the assistance received from our first President, who devoted so much of his time and his ability to it.

Mr. A. E. Frost was elected Treasurer in January, 1881, a position he has since filled without intermission.

The following tabulated statement gives the places of meeting and the names of our presidents:

1880. Chamber of Commerce and Western Iron Association. William Metcalf, President.

1881. Gallery of the Library Association. William Metcalf, President.

1882. Gallery of the Library Association. A. Gotleib, President.

1883. Gallery of the Library Association. A. Gotleib, President.

1884. Iron and Steel Association Rooms, 77 Fourth Avenue. William Miller, President.

1885. Iron and Steel Association Rooms, 77 Fourth Avenue. George H. Browne, President.

1886. Iron and Steel Association Rooms, 77 Fourth Avenue. E. B. Taylor, President.

1887. Iron and Steel Association Rooms, 77 Fourth Avenue. A. E. Dempster, President.

1888. Penn Building. A. E. Dempster, President.

1889. Penn Building. J. A. Brashear, President.

1890. Penn Building. W. L. Scaife, President.

1891. Academy of Science and Art, Fifth Street. Thomas P. Roberts, President.

1892. Academy of Science and Art, Fifth Street. Alfred E. Hunt, President.

A full list of all our officers, including 1888, can be found in Volume IV. of our *Transactions.*

The life of a society can be briefly told by a tabulated statement showing the number of members, the average attendance at meetings, and the treasurer's statements covering receipts and expenditures. Ours is as follows:

	No. Members at end of year.	Average attendance per meet'g.	Receipts.	Disbursements.
1880	156	51	$ 804 00	$784 85
1881	190	46	2433 85	2155 29
1882	246	42	915 85	584 87
1883	255	52	1407 00	1741 00
1884	283	53	1405 71	1365 11
1885	.....	40	1267 24	1133 47
1886	306	26	1593 77	1287 46
1887	330	34	1469 50	1733 78
1888	342	52	1461 40	1571 98
1889	336	39	1677 50	1447 26
1890	370	41	1449 82	1610 61
1891	324	38	1476 61	1349 74
1892	426	67	2459 54	2465 86

During certain years the "receipts" were increased by donations to the Library Fund. In 1881, $1000 from Mr. William Thaw, and $1000 through Mr. William Metcalf.

In 1887, from Mr. J. A. Brashear, $106.88, the proceeds of a lecture given by him.

In 1892, by rent of desk-room, $60; by balance from Committee on Annual Dinner, $34; by subscription to Library Fund, $35. Total, $129.

Respectfully submitted.

R. N. Clark,

Secretary.

REPORT OF THE BOARD OF DIRECTION.

The Committee on Annual Dues and Application for Membership reported as follows:

In submitting to the Society, on behalf of the Board of Direction, a new form of application for membership, it is proper that I should state that the Board was led to believe that it would be desirable to so amend our mode of procedure in the election of members, as to afford better security against the admission of undesirable members. The Board therefore appointed Mr. Davison and myself a committee to suggest such changes in the mode of procedure as might seem advisable, and to prepare a new form of application. The instructions of the Board did not contemplate any change in the qualifications for membership, but only some provision by which all members of the Society would be advised of the names of applicants before they are acted on, to the end that if any member has knowledge of reasons why a candidate should not become a member he could make known these reasons either to the Board or to the Society before the ballot is taken.

We have therefore recommended that one month be allowed to elapse between the meeting of the Board at which the name is presented, and the meeting of the Society at which the ballot is taken; and that in the interval the Secretary publish the names of all applicants in his postal card or circular announcing the next meeting.

In accordance with this plan we have prepared a new form of application, which differs from the old one in these respects:

1. It is prefaced with this paragraph:

"Applications for membership should reach the Secretary not

later than the Saturday preceding a regular meeting, which is held on the third Tuesday of each month, except in July and August. If favorably acted upon by the Board at that meeting the name will be published by the Secretary, and the ballot will be taken at the next regular meeting.

2. Print with the application those parts of the Constitution and By-Laws which relate to membership.

3. The form of application to be substantially the same as heretofore in use, with the addition of blank spaces for statistical information as to age, nativity, and present occupation.

We also recommend that in all cases this blank be signed by the applicant in person.

A proof copy of this blank is herewith submitted. It has been presented by the committee to the Board who passed favorably upon it, with instructions to present it to the Society for its action to-night.

T. H. JOHNSON.

REPORT OF LIBRARY COMMITTEE.

To the President and Members Engineers' Society of Western Pennsylvania:

GENTLEMEN: On behalf of the Committee on Library I beg to submit the following report of progress during the year 1892:

Since the last annual meeting the additions to the library have been as follows:

Telegraphic Determination of Longitudes in Mexico, Central America, the West Indies, and on the North Coast of South America. No. 97. 1888, '89, '90. 1 vol.

Annual Report of the Chief of Engineers United States Army. 8 vols.

Report of Commissioner of Education for 1888, '89. 2 vols.

Report of the Chamber of Commerce of Pittsburg, 1891.

Report of the Board of Rapid Transit R.R. Commissioners. 1891.

Report of the United States Civil Service Commission. Nos. 4, 6, 7, 8. 4 vols.

Traité Complet de Fabrication et Raffinage de Sucre de Betteraves. Par L. Walkhoff. From J. H. Paddock.

Stability of Arches. Capt. D. P. Woodbury.

Annual Report Commissioner of Patents. 1890.

United States Coast and Geodetic Survey. Report 1890. From T. C. Mendenhall.

Report of Chief of Ordnance. 1891. From J. G. Siebeneck.

In Memoriam of Wm. Thaw, Esq. From Wm. Thaw, Jr.

Memoire Sur la Viaduc de Garabit. G. Eiffel. From A. E. Hunt.

Transactions of Engineers' Society of Western Pennsylvania. Vols. 2, 3, 4.

Report of the Chief Signal Officer. 1872, '85, '86, '87.

Smithsonian Report. 1890.

Geological Survey of Alabama. 1890.

Pennsylvania Geological Survey. 1892. 1 vol.

Atlas Pennsylvania Geological Survey. 1891. 2 vols.

Pennsylvania Geological Survey. Final Report. Vol. 2.

United States Geological Survey. 1882–89. 8 vols.

Mineral Resources of United States. 1882, '83,' 84, '85, 86, '87, '88. 6 vols.

Transactions American Society of Civil Engineers. Vol. 25.

Descriptive Index of Current Engineering Literature. Vol. 1. 1884 to 1891 inclusive.

Minutes of Proceedings of the Institution of Civil Engineers. Vols. 109, 110.

Minutes of Proceedings of the Institution of Civil Engineers. Special volume. 1891.

Transactions and Proceedings of the Technical Society of Pacific Coast. 2 vols. 1884–1892.

Transactions American Institute of Mining Engineers. Vol. 20. 1891.

Tables of Equivalents of Metrical and English Measures, Weights, etc. Areas of Right-Angled Triangles, Frogs and Switches for Various Gauges. From the author, John McGee, C.E.

The Theory of the Continuous Girder. Presented by M. A. Howe, the author.

Formulas and Tables Used in the Application of the Method of Least Squares. Presented by M. A. Howe the author.

Some Experiments to Determine the Strength of American Vitrified Sewer Pipes. Presented by M. A. Howe, the author.

Diagrams, Formulas and Tables, for Bridge Engineers and Architects. Presented by M. A. Howe, the author.

Report of State Board of Health, Massachusetts. 1891.

Report of Mining Industry of New Zealand. 1892.

Sixty-six volumes were added to the Library during the year.

Bound Journals.

Official Gazette. 8 vols.

Official Gazette, Indexes, 1 vol.

Annual Report Commissioner of Patents. 1889.

Scientific American. 4 vols.

Scientific American Supplement. 4 vols.

Engineering Record. 6 vols.

Engineering News. 4 vols.

Transactions, American Institute Mining Engineers. 1878–1879. 1 vol.

London Engineering. 4 vols.

Annales des Mines. 5 vols.

Annales des Ponts et Chaussées. 8 vols.

Annaire de Travaux. 1 vol.

Wagner's Jahres-Bericht. 2 vols.

Transactions, American Society of Civil Engineers. 1 vol.

Journal of Franklin Institute. 4 vols.

Report Mining Engineers. 2 vols.

Transactions, American Institute Mechanical Engineers. 1 vol.

Minutes of Proceedings, Institute Civil Engineers. 1 vol.

Engineering and Mining Journal. 4 vols.

Report American Institute of Mechanical Engineers. 1 vol.

Index of Patents. 1891. 1 vol.
Electrical Engineer. 5 vols.
The Electrician. 5 vols.
Transactions, American Electrical Engineer. 1 vol.
Index American Society Civil Engineers. 1868–1889. 1 vol.
Transactions, American Society Civil Engineers. 6 vols.
Transactions, Liverpool Engineering Society. 2 vols.
Transactions Association Engineering Societies. 3 vols.
Engineers' Club of Philadelphia. 3 vols.
In all, 90 volumes were bound during the past year.

Pamphlets Received.

Album of Agricultural Statistics of the U. S.

Schedule of Examinations for 1892. Departmental Railway Mail and Indian Service.

First Annual Report of the U. S. Civil Service Commission.

Third Annual Report of the U. S. Civil Service Commission.

Classification of the World's Columbian Exposition.

Fifth Annual Report of the Interstate Commerce Commission. 1891.

Geological Survey of Alabama. 1875, '76–'91.

Bulletin No. 2—On the Phosphates and Marls of Alabama.

Report of Bureau of Education. 3 vols.

Report of the Fourth International Prison Congress at St. Petersburg, Russia.

Reports of Bureau of Education.

—Promotions and Examinations in Graded Schools.

—Rise and Growth of the Normal School Idea.

—Biological Teaching in the Colleges of the United States.

—Southern Women in the Recent Educational Movement in the South.

In all, 16 pamphlets.

There are on the List of Correspondents 69 exchanges, most of which are received.

We have also 22 Journals to which the Society subscribes and which have been received very regularly during the past year.

Two new book cases have been placed in the rooms at a cost of $90, and the books classified, each case being marked so that at a glance one may see where a special line of reading is to be found. The tables are provided with pens, ink and paper, making a convenient place for study.

As will be seen from an inspection of the list of books added during the year, these are mainly of the nature of public documents.

Although it has not been possible to make any purchases of new books, the committee has been able to have bound ninety volumes of periodicals.

For the benefit of the Chemical Section recently established as a branch of the Engineers' Society, a number of journals devoted to chemistry have been added.

The material for a new drawer-catalogue has been procured, but the members of the committee have been obliged to leave the finishing of this much-needed improvement to their successors.

Probably the most important improvement for the year has consisted in the sorting out and arrangement of the files of proceedings of our Society which are now in perfect order, including the papers read at meetings since our incorporation.

The committee has been in receipt of numerous communications from members who have made valuable suggestions as to the purchase of new books for the library. For want of funds we regret that we have been unable to act on any of these.

While our Society has reason to be proud of the periodical literature collected, it must be admitted that we are unable to offer to our members the use of such reference books as should be in the cases of a technical library.

F. C. PHILLIPS,
Chairman.

REPORT OF THE COMMITTEE ON ROOMS.

During the past year the Society has been tenants of the Academy of Science and Art, occupying the three front rooms on the second floor. Ten regular meetings and seven meetings of the

Chemical Section have been held in the parlor of the Academy. One meeting of the Chemical Section was held in the room of the Pittsburg Chapter of the American Institute of Architects, a room adjoining ours, through the courtesy of its members.

Our rental and charges amount to $496, divided as follows: Rent, $300; curator, $175; telephone service, $24.

During the year a desk for the Secretary has been purchased, a set of wrought-iron legs presented by Mr. Chester B. Albree, and thirteen framed photographs have been hung, presented by The Baldwin Locomotive Works, Alexander McClure, Hoopes & Townsend, The Brooks Locomotive Works, H. K. Porter & Co., Babcock & Wilcox.

R. N. Clark,
Chairman.

REPORT OF THE COMMITTEE ON PROGRAMME.

I would like to say a word with regard to the trials and tribulations of the Committee on Programme, which may be of benefit to our successors. It has been exceedingly difficult, during the past year, to get papers for the Society. It has only been on the personal solicitation of the members of the Committee that we were able to obtain the papers that were read.

It seems to me there is enough interest represented in this Society, and there are enough engineers who have something worth writing or saying to the Society, to give us some short papers.

The American Institute of Mining Engineers have a great number of short practical papers, and it seems to me there are enough members in this Society to volunteer papers like that. I think it would add much to the interest of the meetings to have occasionally some of that class, instead of depending on long papers, as is our present custom.

W. G. Wilkins,
Chairman.

The retiring President then read his address.

PRESIDENT'S ADDRESS.

BY ALFRED E. HUNT.

THE past year has been one of unusual prosperity to our Society, and I call your attention, with pleasure and pride, as your President, to the report of our Secretary, to whom, with the kindly help of many of our members, our membership has increased and more satisfactory financial condition is due.

The character of papers presented compares very favorably with the standard fixed in previous years; and the fact of their being largely reprinted by the technical journals shows that the proceedings of our Society are being appreciated by the engineering public as never before. As your President, I wish to congratulate and sincerely thank the Programme Committee, as well as the authors of papers of the year, for this. If some liberal man will present the Society with a sum of money the interest of which shall be used to purchase annually a suitable medal to be presented to the author of the most meritorious paper of each year, he will add not only a monument to his name but an added incentive to authors which will undoubtedly add greatly to the value of our *Transactions.*

Our Chemical Section, formed during the year, with their separate meetings, has added not only to our numerical strength and the value of our annual *Transactions*, but also to the interest and profit of our regular monthly meetings, by the presence and participation in our discussions, of many of the chemists of our city and neighborhood.

The increased revenue of the Society, owing to increasing the dues of resident members to seven dollars per year, and of having an initiation fee of five dollars for new members, will, I trust, enable the next year's annual reports of your officers to show a more satisfactory balance of cash, as well as a much needed expenditure having been made in the maintenance and increase of our library, which is to-day the nucleus of what will undoubtedly be one of the best engineering libraries in the country.

Our city too has prospered during the past year, as shown by

the very large volume of trading in real estate, at prices which have been steadily increasing in all districts of the community; the building record of the year being far in advance of that of any previous year, both in amount and in quality. Many large and elegant business blocks have been completed, and many more have been commenced and are now in course of construction. It has been estimated that the money involved in the real estate transfers in the city of Pittsburg for the year has approximated twenty millions of dollars.

Our country has prospered as well during the past year, as evidenced by the financial statements of the government lately published by the official heads of departments, and by the large increase in clearing house exchanges, of over sixty-two millions against only about fifty-six millions in 1891, in railway earnings, and the aggregate of our foreign trade, and the excess of our exports over imports by about seventy millions of dollars.

Without doubt, the progress in industrial development of the year 1892, has been the greatest of any in the history of the country and probably of the world. It will prove at least an honorable record for the party coming in power with the Fifty-third Congress to endeavor to surpass. As in the case of all waves of prosperity that have swept over the country in the past, foreign immigration was exceptionally large during the year until quarantine regulations against cholera cut it down. The time has evidently come to check the five million increase to our population per decade by immigration, that has been going on for the past twenty years.

The railroad interests of the country have assumed a magnitude during the past few years that few people comprehend. There are at present over three-quarters of a million of men in the employment of the railways of the United States, and the total assets of these railroads amount to twelve millions of dollars.

The amount of new main lines built during the year 1892 would, if put together, make a line from New York to San Francisco and back again to the Mississippi river.

Engineers have been especially busy during the past year, and will continue to be for the coming one, in all probability, as evi-

denced by the engineering work at present in hand, or, in the language of the street, "on the carpet," unless a general business stagnation should ensue.

The Niagara tunnel, with the development of water power aggregating a hundred thousand horse-power, with the many manufacturing plants that will undoubtedly soon be built, there is now so far under way as to be reckoned as one of the achievements of the year which will be of vast advantage to the country, and will require the aid of a large amount of engineering skill in the future, as it has already in the past.

The Engineers of the Niagara Power Company are authorities for the following statements regarding their power:

The larger share of the 326 feet of fall of the water from Lake Erie into Lake Ontario occurs in the vicinity of Niagara Falls. The Horse Shoe Falls, through the centre of which the international boundary passes, are 158 feet high and 2600 feet wide, the American Falls being 169 feet high and 1000 feet wide. They estimate the flow of water to be 265,000 cubic feet per second; and to use the maximum capacity of the tunnel (100,000 horse-power) with 140 feet head, and with an efficiency of 75 per cent., will require 10,200 cubic feet of water per second, or less than 4 per cent. of the average flow over the falls.

The tunnel itself which forms the tail-race for the water power is 6700 feet long, about 20 feet wide, and about 27 feet deep, and is lined with brick. It was commenced on October 4, 1890, and was finished in almost exactly two years' time. It has a section 490 square feet, and a hydraulic gradient of about seven feet per thousand.

The engineering problems involved in projects for the transmission and distribution of this power from the turbines, or other water motors, together with the hydraulic projects for the similar developments of power upon the Canadian shore, are among the great undertakings in engineering that will probably be worked upon during the coming year.

Further developments of the Niagara open canal water power, of the cutting of another canal from the Niagara river at a point near the town of Tonawanda, to the natural gulf or falls running

east from Lewiston to Lockport, at some point near the town of Lockport, and using the Eighteen-Mile Creek, as a tail race to Lake Ontario, will undoubetedly be among the engineering feats of the future, to develop this wonderful natural horse power now going to waste between the two lakes.

Eastern engineers and capitalists are now considering the project to dam the Housatonic river in Connecticut, and in the Northwest, plans to utilize the water at Sault Ste. Marie and in the South the falls of the James and other rivers, are being exploited.

There seems little doubt but that the time is soon coming when the great natural water powers of the country will be developed and the power transmitted by electricity or otherwise to places where it will be distributed to the many manufacturing industries where it can be utilized. Quite surely within the next two years the great water powers at Lowell and Holyoke, Mass., which have so long been the monuments of what Yankee ingenuity and thrift can do in the way of water powers, will be eclipsed and left far behind in the scale of magnitude of utilized water powers.

The engineering projects connected with damming up the waters of the Croton Watershed for the proposed storage reservoir to contain thousands of billions of gallons of water, will probably be an undertaking of the next year or so. This dam will necessitate probably the largest single masonry construction in the world; the present plans contemplating a wall nearly two-thirds of a mile in length and extending into the ground for a depth of at least 70 feet.

Besides these works, two tunnels under the East river and one tunnel under the Hudson, one suspension and another cantilever bridge over the Hudson, two more long bridges over the Harlem river, an underground railway along the ridge of Manhattan Island, from the Battery to Yonkers, and an immense Grand Union Passenger Station for the various railways centering in the city, are among the pretentious list of improvements now contemplated in and around the city of New York.

Chicago has demanded much of engineering skill within the past year, in the construction of buildings and transportation facilities for the World's Columbian Exposition, as well as in her

municipal improvements for sewage and water supply, and in the construction of her monster steel framed buildings, and is now ambitiously endeavoring to start projects for ship canals to navigable water on the Mississippi river on the one side and by a short cut from Lake Michigan to Lake Erie on the other, and in this way to become an ocean shipping port.

Undoubtedly these canals will be built, or at least started, within the next decade, the result of which will be to make the "Windy City" one of the greatest business centres of the world.

A party of engineers are now engaged by the government in preliminary surveys for a transcontinental railway to connect North and South America, and it is understood that the party are now working in the southern part of Ecuador, having already traversed and worked up a practicable route over the most difficult portions of the mountainous country to be traversed.

In thus calling attention to the engineering work being carried on or soon to be in hand for the government, the construction of roads in the Yellowstone National Park and the construction of vessels for the Navy and the pressing needs for adequate means of sea coast defense and of suitable quarters for a national quarantine service should be mentioned. This latter subject, it is to be hoped, will be provided for by immediate passage by Congress of a wise national quarantine bill.

The facts regarding the frightful ease and rapidity of portability of cholera germs and not their diffusion as a general contagion, has only become known during the past ten years. The wonderful rapidity and facility with which this plague can be transported, is illustrated by the record of the past year in which the cholera germs started from Teheran in Asia, where it was declared epidemic, on August 6, 1892, and a week later it had reached St. Petersburg, and in nine days more it had begun its terrible slaughter in Hamburg, where 9000 people died of it during the last few months of the year. In another week it had reached Bremen and Berlin, and in only a few days more the stringent quarantine in New York harbor only was preventing cholera-ladened pest ships from landing the disease in this country. That these germs can be killed by a temperature of 160

degrees Fahrenheit and by complete desiccation or drying, when skillfully none, and that without these precautions being taken, these germs can (and, as experience has shown, surely will) be brought over from cholera-infected foreign ports and can soon be transmitted to fresh subjects, and can spread death through polluted water and food supplies to our whole country, are facts that the responsibility of not acting upon to the best and most accurate knowledge that we have upon the subject, will rest very heavily upon the official shoulders of our law-makers of the Fifty-second Congress should they delay stringent legislation upon the matter.

Laying aside all party or personal prejudices, there should be but one motto for all, now that the pressing need of the time is first in the legislation by Congress, of states, cities, and towns, and then in the thorough execution by all public officers, and that is that cleanliness is next to Godliness—on which side the adage doth not say:

Certainly, the unrestricted entrance, by steamer loads, of emigrants from the lowest classes of the population of the at present cholera-infected countries of Europe, or of the rags which these people have worn or handled, is not in spirit with this motto.

The general adoption by the armies of the civilized world of breach-loading cannon and magazine rifles of great accuracy and range, has necessitated changes, not only in battle tactics, but in the drill regulations themselves. It is worthy of note that following this progress of the best practice of to-day, the United States Army has, during the year of 1892, adopted a new rifle that may be used either as a magazine or single shot rifle at will—the "Krag-Jorgensen" model, as it is called, to replace the Springfield rifle, and has also adopted a new drill regulations, providing for movements in open and extended order, in place of the Upton Tactics, and the old methods of touch of elbows of the soldiers and solid formations of troops in action.

The various scientific congresses to be held during the progress of the World's Fair, will be interesting events to the members of our Society—especially those pertaining to civil, mechanical, and metallurgical engineering, and chemistry. These are to be held during the latter part of the month of July, 1893.

It is to be hoped that many of our members will make their plans to attend these meetings, as well as use the various engineering headquarters in Chicago and at the Fair to which, as members of this Society, they are all entitled.

The Panama Canal scandal, with its record of five hundred million dollars worth of bonds, on which over two hundred and sixty-five millions has been raised, and less than eighty millions worth of honest work expended upon the Isthmus, the remainder having been misappropriated by the officers of the company by a system of false and fraudulent credits, is a sad ending to the life of the brilliant engineer who had achieved such a success at Suez, against the publicly expressed opinions of eminent English and Continental engineers.

M. de Lesseps's history is a marked object-lesson to every engineer; that in our profession, above all others, fidelity and honesty are the first two cardinal virtues necessary to lasting success, even though, as in his case, we may be able to achieve the highest aims of an engineer in his profession, to solve some of Dame Nature's deepest problems whereby the commerce of the world is increased and the world's civilization is advanced.

The illustrious dead of the year 1892 number among them Tennyson, Whittier, Walt. Whitman, Cardinal Manning, Rev. C. H. Spurgeon, Prof. A. E. Freeman, and Prof. Emile Lavelage, Sir Morell Mackenzie, Cyrus W. Field and Dr. David Agnew, Geo. W. Curtis, Ernest Renan, Dr. Noah Porter and Prof. Theodore Dwight, Jay Gould, John Jay Knox and Sidney Dillon, poets, divines, historians, eminent journalists, surgeons, physicians, publicists and financiers, all the professions and leading walks of life, have yielded tribute to the grim destroyer.

And so among our own profession and among the metallurgists and others whose occupations and business interests have led them into close relations to engineers. Many of them were among the pioneers in their sections in promoting many of the largest establishments of the present day. I quote from the *Iron Age* list of the illustrious dead of the year 1892: William P. Shinn and William Thaw, Jr., of whom eulogies are in the *Transactions* of our Society for 1892. B. J. Clark, President of the Thomas Iron

Company; Theodore Sturgis and John T. Knight, of Scranton and the New York iron trade; Joseph R. Anderson, managing the famous Tredegar Works; Charles Van Depole, the electrician; Eugene H. Cowles, the electro-metallurgist; Dr. T. Sterry Hunt, Prof. John Newberry, and Henry E. Coulton, geologists and chemists, and John F. Winslow, the mechanical engineer who assisted in building the Monitor; William Rea, of Robinson-Rea Manufacturing Company; W. J. Frost, of the Republic Iron Works; William Smith, of Smith, Sutton & Co., Theodore Woodruff, of sleeping-car fame; Robert J. Anderson, of Anderson, DuPuy & Co.; James Morgan, for many years superintendent at Jones & Laughlin's; John Wampler, for many years chief engineer of the works of W. Dewees Wood Co.; Captain James H. Murdock, Secretary of the Wrought Iron Pipe and Tube Manufacturers' Association; Thomas Struthers, of Warren, Pa.; James B. Francis, ex-president of the American Society of Civil Engineers, of Lowell, Mass., and one whom we young members always looked up to as one of the fathers of our Society, and in fact, of our profession; Zenas King, President of the King Bridge Company, Cleveland, O.; James I. Bennett, known to all old Pittsburgers as one of its leading business men, and Dr. E. W. Siemens, of the Siemens-Halske Electric Company of Berlin.

The problems connected with the supply of water and its transportation and distribution from the mountains for the purpose of irrigation are already engaging the attention of many engineers, and is a line of work that will call for the services of many more engineers as the country becomes more thickly settled. No one who has seen the fertility of the virgin Western soil after it has been successfully irrigated will question the economy of large expenditure for irrigation.

In our own city district, our rapidly increasing population, not only in the city, but up the banks of the rivers from which we at present fill our reservoirs, will soon demand a less polluted water supply. This should be located up among the mountains, and will probably necessitate a mountain valley having a large watershed for a reservoir, a large dam, and a conduit to carry the water by gravity down to a Pittsburg distributing reservoir. Such a

plan has been already outlined for a reservoir on Indian Creek in a valley lying between the Chestnut and Laurel ridges. This plan will necessitate a conduit tunnel through the hills of the Chestnut Ridge, and may not be the most suitable location, and I do not speak from any careful study or examination of the advantages of the particular location. But towards the principles upon which this plan is based, the best engineering practice is tending to day. The impracticability of either keeping the streams running through the city free from pollution, or of suitably freeing from bacteria by any process of filtration or well-sinking operations upon a scale of sufficient magnitude for the water supply of a large city, is becoming widely acknowledged in the best engineering practice.

The Ohio river and Lake Erie ship canal is another project that we, as Pittsburgers, should take more organized interest in than we have yet done. This undertaking, I hope, will be one that presidents of this Society of no very distant date can write about as one of the engineering feats accomplished in our neighborhood. Certainly this canal would be of great value to the prosperity of Pittsburg, as well as of strategic value to the general government. Unless transportation through the air shall become an established fact, there is no doubt but that the march of civilization and improvement will bring about many great inland waterways at a no very distant date.

At this date there are 23 bridges across the Mississippi river, 21 bridges across the Ohio river, and 16 bridges across the Illinois river. Many further large bridge schemes are now being considered in this country which have not yet come to a sufficient maturity to mention here; and in Great Britain a bridge over the English channel is one of the great engineering possibilities of the near future. Bills are now before the English Parliament for the promotion of such a scheme. It is estimated that such a bridge can be built for $250,000,000. Tunnelling the channel is an older, but not now favored, plan for railway connection between England and the Continent.

In bridge building, the notable tendency of the times is in the direction of the building of extremely long and large plate girders.

In American practice, plate girders have been generally superseded by lattice girders in length of over 80 to 90 feet, and they, in turn, by pin-connected trusses in spans of over 130 feet or thereabouts.

Even in that admirable paper of the year entitled "Some Disputed Points in Railroad Bridge Designing," read before the American Society of Civil Engineers in March, 1892, by J. A. L. Waddell, this author says:

"On account of the unavoidable uncertainty concerning stress-distribution that exists in riveted connections, plate-girders whenever they can be used are preferable to lattice-girders. The latter, however, as through bridges for single track spans, between 100 feet and 150 feet in length, and for double track spans between 100 feet and 125 feet, are the proper style of structure to adopt."

During the latter half of the year 1892, many plate-girders of 120 feet, and some even of over 130 feet in length, have been built. The Hamilton Bridge Company having built and shipped, all assembled, a plate-girder drawbridge consisting of girders 134 feet 5½ inches long, with a depth of 8 feet 5½ inches, with cross-section bracing attached, the total weight being a little over 69 tons.

The advantages claimed for the use of plate-girders being the ease and rapidity of erection; economy in first cost per pound in assembling at the bridge-shops, due to improved facilities at the mills in being able to roll the long line angles; and wide and heavy plates at no very greatly increased cost; and the improved machinery and shop facilities at the first-class bridge shops for handling, drilling, punching, and riveting, these long girders.

Long plate-girders for through-bridges are safer in collisions and derailments, and are of less cost of maintenance, excepting for paint. One reason for this may be on account of the laterals being stiff members (usually angles), and having no diagonals or counter-rods in the web system to be injudiciously changed in adjustment by sleeve-nuts or turn-buckles.

In metallurgy, the advance of the year just past has been in the production of so-called "nickel-steel," for armor-plate and projectiles, which, at the Indian Head Proving Grounds, has been

shown to be equal (if not superior) to that really old tempering process called the "Harvey Process," both processes, in American hands, showing metal that is far superior to anything produced before, and which has been a rude shock to the governments of Europe, who have been for years investing in naval armor considered impregnable, that now, with a year or so of experiment, has proven both capable of being pierced by the new shot, and of being much inferior to the newer armor-plate produced at the Bethlehem Iron Works, and the Homestead Steel Works of the Carnegie Steel Company.

This latter name calls our attention to the now famous strike of the 3800 employés of the Carnegie Steel Company at Homestead, followed by the "sympathetic strike" of 2500 of their fellow workmen at the Union Mills, and 1500 at Beaver Falls, and 300 at Duquesne, which commenced July 1st, 1892, and which "ended when the snow fell," by such of them as were fortunate enough to secure places being obliged to go back to work, a large portion of the remainder being at present "objects of charity," according to the daily press of our city.

In its loss of life and accumulation of human suffering, it is as sad an instance of misguided and ill-judged action as has been afforded in many a long year. Not so disastrous in expenditure of human life and human suffering, but equally unsuccessful, have the other great strikes of the labor organizations proven during the past year, as notably, that of the switchmen at Buffalo, the miners at Cœur d'Alene, Idaho, and the participants in the Tennessee fight against the use of convict labor.

To the engineer who studies *things* more than *men*; to the philanthropist who has at heart his brothers' welfare, no matter how humble that human brother may be; to the *Christian*, these efforts of failure, of suffering, and of death, should excite both sympathy and every possible thought and effort for the uplifting of his fellow-men out of the environment that is both the sad cause and effect of such labor disturbances as those of the year 1892.

This subject is one that I believe will require both careful and good statesmanship, and an earnest and careful study on the part

of the masses of the right-minded people of our country—a state of affairs difficult to obtain in the heat of party ambitions and manœuvring among our legislators, and of the inertia of public indifference.

On motion, the thanks of the Society were tendered to the officers and members of the Committees for their services.

The election of officers to serve during the ensuing year being in order, the President appointed the following to act as tellers: Harry J. Lewis, George R. Harlow, James M. Camp, who, in time, reported that the following officers had been elected unanimously, 47 votes having been cast:

M. J. Becker, President, one year; Thomas H. Johnson, Vice-President, two years; Walter E. Koch and Emil Swensson, Directors, two years; A. E. Frost, Treasurer, one year; R. N. Clark, Secretary, one year.

The elected President, Mr. M. J. Becker, upon taking the chair, made the following address:

GENTLEMEN: I suppose, under ordinary circumstances, it would be but proper that I should express my profound gratitude for the honor conferred upon me, which I certainly prize very highly; but on this particular occasion I think it would be far more in order to extend my sympathy to you for this infliction which you have imposed upon yourselves. Being self-imposed, you will have to blame yourselves if there should be any shortcomings on my part which you may discover in the future.

Adjourned.

R. N. CLARK,
Secretary.

FIRST ANNUAL MEETING OF THE CHEMICAL SECTION.

JANUARY 24TH, 1893.

Professor F. C. Phillips, Chairman; James O. Handy, Secretary.

The Secretary read his annual report.

SECRETARY'S REPORT

For the Year Ending December 31, 1892.

HISTORY.

A preliminary meeting was held March 12, 1892, in the Thaw Mansion. A second meeting followed on the 24th of March. At this meeting the first paper read before the Section, was presented. At the third meeting, held April 21, a constitution and by-laws were adopted. Since that date five regular meetings have occurred, and one joint session with the American Chemical Society, making a total of nine meetings of the Chemical Section during 1892.

MEMBERSHIP.

Number of chemists who were members of the Engineers' Society before March, 1892,	21
Number of chemists admitted in March,	20
" " " " " April,	38
" " " " from April to December,	3
Total membership of Chemical Section, December 31, 1892,	82

PAPERS.

Seven papers on subjects relating to analytical chemistry have been read by members of the Chemical Section.

Two papers on special chemical apparatus and appliances, and one paper on a metallurgical subject have also been presented. Total number of papers in 1892 was ten.

The discussions have been valuable and have embraced several subjects besides those mentioned in the papers.

Work of Committees.

The Committee on Chemical Literature has done substantial work as stated in the minutes of the annual meeting.

Attendance.

The average attendance at meetings has been over twenty-five per cent.

James O. Handy,
Secretary Chemical Section.

Approved in substance, January 24, 1893, by vote of meeting.
James O. Handy,
Secretary.

Mr. James O. Handy reported the progress of the Committee on Indexing Chemical Literature. The *Journal of the Society of Chemical Industry*, the *Chemical News*, *Journal of Analytical Chemistry*, the *A. I. M. E. Transactions*, the *Zeitschrift für Analytische Chemie*, the *Chemiker Zeitung* and other periodicals were being indexed as soon as received, and results would soon be transferred to a permanent card index. This work being added to each month, will make current literature more accessible.

Professor Francis C. Phillips, the retiring chairman, delivered an address. His subject was: "Expert Evidence before the Courts."

ADDRESS TO THE CHEMICAL SECTION

BY PROFESSOR F. C. PHILLIPS,

It is an established custom with all scientific societies that the retiring chairman, in taking leave of his office and falling again into the ranks, shall address his fellow-members upon some sub-

ject of general interest in itself likely to stimulate them to renewed efforts in their devotion to science under his successor.

Usually he finds among recent scientific inventions and discoveries an abundance of topics, and all are likely to be interested in a general survey of the progress of applied science during an entire year.

An event of far greater moment, however, to the chemists of Western Pennsylvania than anything recorded in the recent literature of chemistry is to be found in the joining together of so many of those interested in chemical study and research into a society whose object, according to the constitution, "shall be the consideration of papers and topics connected with chemistry and metallurgy, and the encouragement of researches and investigations in the same."

Our society has rapidly progressed in numbers and in influence, and we may well congratulate ourselves on the occasion of this our first annual meeting, that we have achieved so much in so short a time.

Our membership is large and we are especially benefited by our organization as a section of the Engineers' Society of Western Pennsylvania, which gives us many advantages.

We have, at no extra cost, secured the use of an excellent library.

Although apparently subordinate to the Engineers' Society, we control our own publications and are generally more independent than if we owed allegiance to an authority in a distant city.

Financially, we are prosperous, for we have no debt and need anticipate none.

A marked characteristic of our society is to be found in the fact that the younger members have shown a disposition to take a prominent part in all deliberations, and have already produced excellent proof in the way of papers, of their ability and skill in the investigation of methods of analysis and research.

In this respect we are probably setting a good example to other societies which meet in the Academy.

It is safe to predict that the Chemical Section will exert a much greater influence in the near future in elevating the profession

of chemistry, and in demonstrating its importance to the community.

One of the results of our meetings will undoubtedly be to develop a deeper sense of our responsibility, and at the same time of the responsibility towards us of those who seek our services.

A clearer recognition of this mutual responsibility is particularly needed in the relationship of the chemist to the courts of law, and it is to this side of the chemical profession that I wish especially to draw attention. In the settlement of questions of right in the early courts of law it was required that he who claimed legal redress for an alleged injury should establish his charges by the testimony of eye witnesses. But it often happened that in order to determine the truth of an accusation such testimony was not sufficient, and it became necessary in order to reach a decision of the case to depend upon evidence of a purely hypothetical nature.

It was natural to suppose that when brought together a mysterious influence would be exerted upon each other by the murderer and his victim. The wounds upon the body of the murdered man would gape if touched by the hand of the murderer, and so it was possible to fix the guilt of the accused, although no one had witnessed the commission of the crime.

Among the results of the development of chemical knowledge in early times must be classed the art of combining together vegeable and artificial substances for the purpose of cheapening the cost of production and increasing the profit upon articles of food and drink.

As the art of adulteration has always been a little ahead of the knowledge by which this adulteration could be detected, it has been found necessary, since the earliest times, to depend largely upon the opinions of experts; that is to say, of persons whose judgment enabled them to decide where the facts observable by the average citizen were insufficient.

Early in the 16th century it became known in England that the brewers were in the habit of adulterating their product. In the town of Guilford, ale-tasters were appointed, whose duty it was to detect falsification. Sugar was a common adulterant. But if sugar

had been used, the dried residue of the ale would exhibit adhesive qualities. Hence, when the expert poured out some of the suspected ale upon a bench, and sat down on it, it was easy to detect such an adulteration, for the taster would inevitably, in such a case, stick fast to the bench. Thus, a scientific proof of the guilt of the brewer could be established, although the accused had not been detected in the criminal act.

When we compare such seemingly grotesque methods with the system by which science is made to enlighten a jury in a modern court of justice, it must be admitted, that in this direction the progress of science has not been commensurate with the advanced position which it occupies in other departments of human knowledge.

No sharper distinction can exist than that between the two types of testimony in a court of law.

A witness called to testify as to a crime committed in his presence is asked to detail all he has seen. He must submit helplessly to being pounced upon by the lawyers if he should inadvertently venture an opinion, because his function is merely to certify to observed facts.

How different is the position of an expert chemical witness.

He may be called to cite results of an exhaustive analysis, and then, having explained the methods of his work, he is asked to form an opinion and to quote the opinions of others. The facts he states are often unintelligible to the entire court, and only his opinions, based upon his own researches can really count with the jury.

Among the results of his tests, what seems to be a circumstance too trivial for consideration by the court, may be, in his carefully matured opinion, sufficient to overturn the testimony of a whole company of common witnesses.

A curious method is followed for the solution of a scientific problem in a court of justice.

By the help of an expert witness the lawyer for the prosecution attempts to convince the jury of the truth of a certain proposition. The witness is expected to come prepared with a set of scientific arguments derived usually from his own investigation of the question, but he is equally expected to suppress all facts of contrary import. On the other side, the defendant's counsel are prepared to demon-

strate by a new set of experts the opposite proposition. Neither expert knows that the other has been engaged upon the case, and both meet in the court-room for the first time, having taken up the same problem from opposite standpoints, and with totally different facilities for the investigation. It may happen that almost exclusive facilities are possessed by the experts engaged by one side.

The attorneys are properly regarded as champions of the parties opposed in the suit, because their special professional function is to defend the interests of a client whether his claim to right is justified or not.

It should be the province of the expert witnesses merely to testify to scientific truths regardless of what may be the consequence to either party in the suit.

We cannot speak logically of an expert witness "for the defence" or "for the prosecution," any more than we could assign a party interest to the presiding judge.

Suppose that a problem in chemistry were to be offered for solution by direction of our society?

Certain members would be appointed who should act in conjunction, and after a sufficient time given them for investigation and the collection of literature, their report would be fully discussed by the society, and a final decision of the question might then be reached, or possibly the question referred back to the committee for further investigation.

If, however, a scientific problem involved in a question of injury to neighbors from a chemical works, or of infringement of a patent right is the issue, the method of procedure must be very different.

Two experts are to proceed upon opposite hypotheses, each to show that the other is wrong.

Having worked, each in ignorance of the other's methods, for the time which it has happened to suit the convenience of the lawyers to allow, the case is called in court.

It does not follow that the most able presentations of scientific facts and conclusions will materially affect the verdict, for the chief influence will be wielded by that expert who is best at repartee and who can best repel the assaults of a cross-examining attorney.

An unexpected difficulty often confronts both experts, for the lawyers usually come primed from the oldest edition of the oldest known authority upon the subject, and easily succeed in casting a slur upon the scientific testimony by ignoring the very recent authorities conscientiously quoted by the expert, who, in his zealous search for the latest and best literature, has forgotten to familiarize himself with the books that were in use in a former generation.

As the jurymen come and go they do not reflect long upon the differences of opinion of the scientific authorities, still it is probable that their verdict is often formed by carefully excluding from their consideration the well-meant labors of the experts. The opposite views neutralize each other exactly, and the jury are compelled to fall back upon the testimony of the common witnesses, occasionally remarking quietly to each other that the "doctors are apt to disagree."

With the presiding judge it is a matter of routine experience that the scientific witnesses go in pairs, that they are usually to be found on diametrically opposite sides of questions of scientific fact, and that just as surely as a witness comes to testify to the truth of a proposition, he will be followed by a second witness prepared to demonstrate an opposite proposition.

As a result of the system, the courts have come to regard expert testimony as of somewhat doubtful value.

Lord Campbell (I. Taylor, *Evidence*, p. 74) observes that "they (expert witnesses) come with such a bias on their minds to support the cause in which they are embarked that hardly any weight can be given to their evidence." Many learned opinions might be quoted to the same effect.

That a real evil exists as regards the position of the scientific witness there can be no doubt. The statement is emphatically true, however, that the expert is by no means wholly responsible for this state of things. Usage has forced him unwillingly into a false position. Nothing can be more clearly and widely distinguished in a court of law than the functions of the judge, the attorney, the jury, and the common witness. So well separated are they that any intrusion of one of these upon the domain of the other is hardly conceivable.

The expert witness, from the moment he assumes a part, finds himself regarded as a kind of attorney for one side, and at the same time as a witness to facts.

In attempting to fulfill both functions simultaneously he may fall to the ground as between two stools.

And yet every circumstance and every influence tend to compel him to assume this difficult position.

Moreover, the peculiar relationship in which he finds himself usually does not come from any wrong intention on the part of those who are interested in the case, but seems rather to result in spite of the really honorable intentions of those who are preparing for a fair and honest battle in court.

F. W. Clark (*Popular Science*, 1888) has called attention to the disrepute which has fallen upon expert witnesses by the existing system, and proposes as a remedy that the judge be authorized to call in a third expert, who, being appointed by the State to exercise such functions, shall be looked to as a final authority in disputed questions as to scientific fact.

Unfortunately, the official expert of the court, obtaining his position by political influence, would be liable to lapse into political methods, and such zeal and energy as characterize the scientific expert, in his present capacity, in searching out facts, could never be expected from an official appointed to office for a term of years.

Every fact developed by the court expert would incite the attorney whose client is affected to call in more experts, and the result would be still more confusing. If the evil is ever remedied it must be by a firm determination on the part of the experts to retire more and more from the attitude of attorneys and fall back to the position of plain witnesses, although this is a far more difficult matter for an expert than the average layman supposes.

We should endeavor to follow in the footsteps of Archimedes, the pioneer and greatest of scientific expert witnesses.

In dwelling upon expert opinions I have had reference mainly to questions where no real difficulty need exist.

As the arts advance the questions involved in litigation relating to patent rights, etc., become more complex, and there is

another class of problems to be solved in the courts, involving chemical theories. In such cases differences of opinion are unavoidable. In Germany where the color industry has so greatly tended to the development of organic chemistry, questions of chemical theory have played a conspicuous part in patent litigation.

As an example of a case where theory rather than fact must form the basis for a decison we may take the isomers obtained by transformation of the benzol ring.

Of the hydrogen atoms in benzol we may replace one by chlorine and one by methyl, which yields the compound chlortoluol.

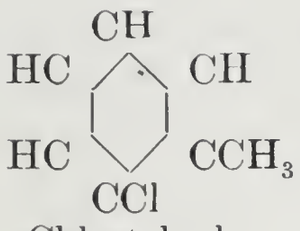

Chlortoluol.

On the other hand it is possible to replace hydrogen in toluol by chlorine and obtain benzilchloride.

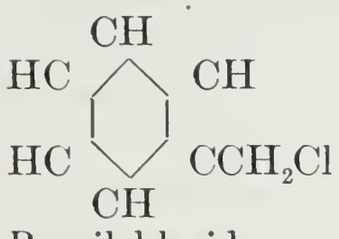

Benzilchloride.

Thus two isomeric bodies arise, totally different in their properties but having the same percentage composition.

It is impossible to explain the differences between the two except on purely theoretical grounds. If a process for making one of these were patented the patent right would rest upon a theoretical conception, rather than upon tangible facts.

It is by no means impossible, however, that the theoretical explanation of these differences may in course of time be wholly changed. Then a difficult question might arise for a chemical witness: should the patent covering a process accurately described

in language based upon the older theory become void? To say slightingly of any profession that "the doctors disagree" is to cast an undeserved slur upon honorable men.

If scientific men were all of one opinion upon questions of theory there could be no progress, and we would find ourselves to-day groveling in efforts to find the philosopher's stone and to transmute metals.

It is to differences of opinion that scientific progress is largely due.

Mr. James O. Handy gave the results of tests of the effect of HCl, of different temperature and strengths, on the determination of sulphur in pig-iron. This was fully discussed.

The Nominating Committee, Messrs. James Camp, R. N. Clark, and J. E. Williams, announced the following list of officers for the Section for 1893.

For Chairman.—Mr. Joseph H. Eastwick.

For Vice-Chairman.—Mr. Fred. Crabtree.

For Secretary.—Mr. James O. Handy.

For Additional Directors.—Mr. George Faunce, Mr. James Camp.

These officers were duly elected by ballot.

SULPHUR IN PIG-IRON.

Experiments on its Determination by Solution in Hydrochloric Acid of Different Temperatures and Strengths.

Method of Work.

(*a*) Evolution method: 4 gms. iron (30 c.c. water, 30 c.c. conc. HCl) boiling hot. Absorbent (*a*) ammoniacal cadmium solution; (*b*) NaOH or KOH solution.

(*b*) Evolution method, etc., the same as (*a*), except use the acid mixture at ordinary temperature at the start.

(*c*) Evolution method: 4 grms. iron (15 c.c. water, 45 c.c. conc. HCl) boiling hot. Absorbents as in (*a*).

(*d*) Same as (*c*), except use acid mixture at ordinary temperature at start.

(*e*) Aqua regia method: Determine sulphur carefully in duplicate.

Material Analyzed.	Analysts' Names.	Method. Per cent. of Sulphur. (a.)	(b.)	(c.)	(d.)	(e.)	(f.)	Absorbents In (a) (b) (c) (d) (e) (f.)
Bessemer Pig-iron.	W. R. Clifton, Newcastle.	.070	.062	.069	.061	.087	.....	Am. cadmium [chloride.
Sample No. 1 Pig-iron.	F.H.Willi'ms Wheeling.	.042	.034 .054	044	.040	.061	.....	Sodium hydrate. Potass. permang'te.
Same sample as above.	J.O.Handy & G.O. Lœffler.	.050	.045	.055	.056	.060	.061	Am. cadm. nitrate.
Sample No. 2 Pig-iron.	F.H.Willi'ms Wheeling.	.079	.071 .098	.095	.084	.....	.....	Sodium hydrate. Potass. permang'te.
L. & Co., H. S. Pig.	G. G. Kirby, Pittsburg.	.068	.065	.067	.065	.....	.....	Am. cadm. chlor.
Same sample.	J. O. Handy, & G.O.Lœffler	.052	.052	.062	.059	.074	.063	Am. cadm. nitrate.
No. 136, Pig-iron.	J. M. Wilson, Steubenville.	.122	.109 .102	125 .127	.120 .119	.145	.....	Potass. hydr., 1 : 5. Am. cad. chlor 1½ per ct. sol.
Refractory Cupola-iron.	J. M. Wilson, Steubenville.	.075 .053	.058	.050 .076	.058 .058	.115	.....	Potass. hydrate. Am. cad. chloride 1½ per cent.
Pig-iron No. 1	A. Eastwick.	.053	.060	.....	.061	.....	.....	Am. cad. chloride.
" " 2	" "	.068	.068	.....	.060	.....	.....	" " "
" " 3	" "	.081	.083	.....	.083	.....	.....	" " "
Pig-iron, mill	F. Crabtree.	.060	.058	.061	.062	.059	.....	" " "
" "	" "		.056					Potass. hydrate.

Summary.

Conclusions from results of experiments of seven chemists working on sulphur determination in nine samples of pig-iron:

Effect of hot 1 : 1 *HCl* (method *a*): This acid gives respectively 0, 0, 0, 2, 5, 10, 16 + 17 per cent. lower than the highest results by the evolution method. In other words, in some hands and on some irons, it gives good results. It gives 16, 20, 30, 31 + 35 per cent. lower than aqua regia.

Effect of cold 1 : 1 *HCl* (method *b*): In five out of six cases the 1 : 1 HCl gives low results. The results are respectively 0, 10, 11,

24, 25 + 33 per cent. lower than the best results by the evolution method, and 25, 30, 30, 44 + 50 per cent. lower than aqua regia.

Effect of hot 3 : 1 *HCl* (method *c*): This acid gives, in all experiments of this series, the highest results obtained by the evolution method. The results, however, are still 14, 16, 20, 27 + 34 per cent. lower than aqua regia.

Effect of cold 3 : 1 *HCl* (method *d*): This acid, in the hands of those accustomed to its use, gives results equal to those with hot acid of the same strength. In other hands it gave 9, 12 + 13 per cent. lower than hot 3 : 1 HCl.

Effect of conc. HCl: This acid gave, in two trials, results equal to hot 3 : 1 HCl.

Personal Equation.—Sulphur Determinations in Pig-Iron, by Different Chemists.

Chemist.	Material.	Sulphur by Cadmium.				Sulphur by Bromine.	Sulph. by Aqua Regia.	
J. S. U.	Pig-iron No. 2	.....	.013	.....	.....	.....	.027	Analyses of a sample made in '91.
J. M.....	"	.....	.....	.....	.....	.028	.....	
F.....	" "	.....	.028	.....	.....	.....	.....	
H. & C..	" "	.....	.025	.....	.....	.....	.....	
C.....	" "	.....	.012	.....	.....	.....	.....	
J.....	" "	.....	.....	.....	.....	.....	.026	
F—e....	" "	.....	.016	.....	.....	.....	.018	
H.S.Co.	" "	.....	.020	.....	.....	.....	.....	
M.F. "	" "	.....	.024	.....	.....	.....	.....	
		(a.)	(b.)	(c.)	(d.)			
K.....	L. & Co. Pig.	.068	.065	.067	.065	.....	.....	Analyses in '93.
H. & L.	" "	.052	.052	.062	.059	.....	.....	
F. W...	Sample No. 1	.042	.034	.044	.040	.060	.....	Analyses in '93.
H. & L.	Pig-iron.	.050	.045	.055	.056	.061	.....	

Effect of various absorbents: They should not produce any dif-

ferences in results. $K_2Mn_2O_8$, HCl + Br, ammoniacal cadmium salts, etc., have all given the same results in *steel* analysis.

There is more difference than there should be between chemists who determine sulphur in the same sample of iron. The table on page 28 will show this, and will point its own moral. The sooner we have recognized standards for the analysis of iron and steel, the sooner these discrepancies will cease. It should be the work of our Society to make and maintain such a set of standards.

Discussion on Sulphur Determination.

Mr. F. Crabtree: Does Mr. Wilson make any suggestion as to the cause of the sulphur not being given off in the case mentioned?

Mr. J. O. Handy: No, he does not offer any theory. He merely says that such was the observed fact, and the remedy, he found, was to add more manganese to the pig-iron.

Mr. F. Crabtree: I might mention that when I was at Joliet we had a good deal of trouble with one particular class of pig-iron, which came mostly from Missouri,—I think from the Missouri Furnace Company in St. Louis. It was noticed for years that all the sulphur could not be obtained by the evolution method. The iron was tested repeatedly for copper, titanium, and metals of that kind, but none could be found; and it was found by experiment that it was necessary to make determinations of the sulphur in the residue from the evolution method or use the aqua regia method. Finally, quite a lot of the iron was sent to Dr. Drown, who, after experimenting for two or three months, said that he found considerable vanadium in the iron, and that he supposed the sulphur was there as sulphide of vanadium, insoluble in hydrochloric acid, and, consequently, not given off by the evolution method.

Mr. J. O. Handy: Mr. Wilson said that he had tested for heavy metals, but found no appreciable quantity of them in 300 grammes of the iron. I do not know whether he looked for vanadium.

Mr. A. T. Eastwick: Is anything definite known as to the

effect of copper in pig-iron? Will a small amount of copper hold back the sulphur, and, if so, how much is necessary in order to have that effect?

MR. CAMP: We, at one time, used a great deal of Cornwall iron, manufactured in the eastern part of the State, which had about .8 per cent. of copper in it, and the results obtained by the evolution method, and by the aqua regia method, always agreed.

MR. J. O. HANDY: Which of the evolution methods did you use?

MR. CAMP: I used caustic soda as the absorbent for a long time, but found cadmium chloride was much cheaper.

THE CHAIRMAN: Strong acid or weak?

MR. CAMP: A solution made half and half. I am using at present three-eighths acid and five-eighths water, which saves about a carboy of acid a week.

MR. A. T. EASTWICK: I would like to ask whether any one has made any experiments with pig-iron containing a high percentage of silicon. In several instances I have noticed that samples of pig-iron, with a large percentage of silicon, left a great portion of sulphur in the residue when treated by the evolution method. So far as my experience goes, those irons which are low in silicon give off nearly all their sulphur by the evolution method.

MR. CAMP: Mr. Ford said, at one of our meetings, that it was his firm belief that sulphur existed in pig-iron as an organic sulphide; I also have been of that belief for several years past, and it seems to me it would be of great importance to chemists to have that question decided. If the sulphur exists in pig-iron as an organic sulphide, do we get the sulphur in the iron when the pig is melted in the cupola? If the sulphur is there as an organic sulphide, the melting may drive it off as sulphurous acid. It seems to me that many differences in results of analyses might be avoided, if that point were definitely determined. There are, I know, mechanical difficulties attached to the determination of this point. If the sulphur in pig-iron is an organic sulphide, and does not combine with the iron, we do not need to pay any attention to

the aqua regia method; the evolution method is good enough. If it does combine with the iron, then the standard is, as it should be, the aqua regia method.

THE CHAIRMAN: If I understand you rightly, the determination of sulphur in iron after it is fused, is more correct than in the original iron?

MR. CAMP: The question is: Does the sulphur in pig-iron, existing there as an organic sulphide, combine with the iron itself on remelting in the cupola?

MR. J. O. HANDY: I had a rather humiliating experience several years ago. I tried to use commercial hydrochloric acid for sulphur determinations. The acid, when heated, evolved no hydrogen sulphide, but it remained to be demonstrated by a succession of incorrect results that the commercial hydrochloric acid, when used for the solution of a sample of steel, gave off H_2S, notably increasing the percentage of sulphur. The commercial HCl contained H_2SO_4, and we attributed the reduction of a portion of the latter acid to H_2S to the reducing action of the nascent hydrogen and hydrocarbons in the presence of HCl.

MR. CAMP: I have several times tried the use of dilute *sulphuric acid* for the solution of iron, and always got low results.

THE CHAIRMAN: There may be something peculiar about the mixture of the acids.

MR. CAMP: If we could use sulphuric acid for the determination of sulphur, it would be a marked economy.

MR. A. T. EASTWICK: Speaking of the use of dilute sulphuric acid for dissolving the drillings, I have had the same experience as Mr. Camp, namely, that dilute sulphuric acid alone gave lower results than equal parts of hydrochloric acid and water. I tried a mixture of dilute sulphuric acid and hydrochloric acid heated to nearly boiling, and obtained results much higher than with hydrochloric acid and water, the results being from .005 to .007 per cent. higher. I was somewhat at a loss to account for the increase.

MR. F. CRABTREE: I have not had time to examine the results given in the list, but I think it may be worth something to some of us to exchange samples. The results do not all agree. One man, for instance, gets quite different results by one method,

while another finds very similar results. I suppose the differences may depend on the characteristics of the pig-iron. In my own case, I found almost no difference at all in the amounts of sulphur found by using different acids in several samples of mill-iron, such as made by the Monongahela furnace, and I know of one or two friends, who are not here, who had the same experience with the iron—mill-iron and Bessemer-iron—which came under their notice. For my part, I would be very glad to exchange samples with the men who have made experiments.

Mr. J. O. Handy: I hope that before long, a large quantity of *standards* of different kinds, will be made by our Society. Chemists can then correct their work by exactly the same sample. I am sure it will be a thing that will greatly advance the accuracy of chemical work, and a thing which we ought to think about and try to help on. We work on small samples, and in many cases, use up the whole of them. Mr. Williams worked on sample No. 1 by the same method which we used ourselves, except that he used a different absorbent. That should have made no difference. We obtained in every instance higher results than he did, and not uniformly so, either. I am quite sure he checked his results; I know we checked ours. Therefore there is something wrong with one of us. Further down in the list, we have a second comparison in which we get lower results than another chemist. So that if the extreme results were compared, there would be a very wide difference. That is the sort of thing we will be able to correct when we have a standard.

Mr. Camp: I might state here in relation to the cost of using cadmium chloride in comparison with caustic soda or potash, that the cost of our sulphur determinations used to average $1.50 to $2 for every twenty determinations. With cadmium chloride solution, I believe sulphur determinations now cost one or two cents; that is, for the materials consumed.

Mr. J. O. Handy: What is your formula for cadmium solution?

Mr. Camp: Use 100 grammes in 8000 c.c. of a mixture of 3000 of water and 5000 of strong ammonia; about 15 c.c. are taken for each titration.

Mr. Handy: We use rather less than half a gramme of cad-

mium nitrate for each sulphur determination. We made some experiments on the rapid evolution of sulphur by hot acid, to determine how perfect the absorption was. 200 c.c. of ammoniacal cadmium solution, containing half a gramme of cadmium nitrate, the depth of liquid being $1\frac{1}{2}$ inches, completely absorbed the H_2S liberated by boiling HCl from 6 grammes of high sulphur iron.

Mr. Handy: Do you filter the cadmium sulphide off before titrating? (to Mr. Camp).

Mr. Camp: No; there is too much hard work connected with that. Another thing I have given up is the theoretical standardization of iodine solution. I have invariably found the theoretical standardization was higher than the actual result. In standardization for steel or pig-iron, I make up the solution by weighing out the iodine.

Mr. F. Crabtree: I always used the theoretical standard. I have standardized my solution and made aqua regia determinations. The aqua regia results were .058 and .059 per cent., and by the evolution method, .059 per cent. and .060 per cent., so that in my case the theoretical standard came out pretty near, and I know from experience that I agree with Mr. Camp very often in sulphur determinations.

Mr. J. O. Handy: I hope that we may improve the evolution method and get off all the sulphur. I made an experiment to see what the actual effect of nascent hydrogen on free sulphur was. I placed some zinc in a flask, then hydrochloric acid and flowers of sulphur. I found that a portion of the sulphur was reduced and went over into the receiver as H_2S. The zinc contained no sulphur.

Adjourned at 10 P.M.

James O. Handy,
Secretary.

February 21st, 1893.

The regular meeting of the Society was held on February 21, 1893, Mr. M. J. Becker, president, in the chair. Twenty-seven members were present.

Messrs. Koch and Swensson having been appointed tellers, the

following were elected members of the society: Joseph A. Hays, Alex. Laughlin, Albert D. Wilkins.

The Committee on Annual Dinner reported that the dinner had been held. Ninety-one covers were set. The proceeds of the ninety-one tickets sold met all expenses in full, without balance.

On motion of Mr. Walter E. Koch, a committee of three, consisting of Messrs. Walter E. Koch, W. Lucien Scaife, and J. A. Brashear, was appointed by the chair, to confer with a like committee of the Chamber of Commerce of Pittsburg, in regard to formulating plans for the reception of visitors in Pittsburg on their way to and from the World's Columbian Exhibition.

The President announced the following Standing Committees, to serve during the present year:

Committee on Library.—H. J. Lewis, chairman; F. C. Phillips, L. B. Stillwell, J. H. Eastwick, Charles Davis.

Committee on Programme.—W. G. Wilkins, chairman; J. O. Handy, W. Lucien Scaife, E. Swensson, J. M. Camp.

Committee on Rooms.—R. N. Clark, chairman; T. P. Roberts, Thomas H. Johnson, George S. Davison, T. M. Hopké.

Committee on Reception.—George S. Davison, H. J. Lewis, F. Engström, G. Kauffman, T. P. Roberts, J. A. Brashear, J. M. Camp.

Mr. Charles H. Nichols then read his paper on "The Construction and Maintenance of Howe Truss Bridges." The paper was fully discussed by Messrs. Becker, Wilkins, Davison, Kauffman, and others.

THE CONSTRUCTION AND MAINTENANCE OF HOWE TRUSS BRIDGES.

BY CHARLES H. NICHOLS, C.E.

There is an almost endless variety of wooden bridges, many of which have long since demonstrated their uselessness, and are interesting to us only as memorials of the past. A brief history and discussion of their merits and demerits would prolong this paper beyond its limit. We will, therefore, abandon this effort and confine ourselves solely to the discussion of but one class,

which, if properly detailed and constructed, may be used in cases where circumstances will not justify the construction of something better.

In this particular locality, and just at the present time, it may seem a little out of place, to even mention the subject of wooden bridges. However, since the age of wooden bridges is not entirely remote from observation, a few remarks in their behalf may be excusable. Though not technically correct, the Howe truss herein discussed will be referred to as a wooden bridge.

Before taking up the question in detail, it may be well to glance at it from a general point of view. There are certain requirements which all works should fulfil, whatever be their material or style of construction. Strength and stability are two essential features which every structure should possess at the expense of everything else. It is also necessary that they be maintained, a thing not easy of accomplishment.

The Howe Truss Bridge.

The Howe truss bridge, so simple in its construction, so easily adjusted and maintained, is perhaps the most satisfactory wooden railway bridge that has ever been designed.

It rendered valuable service in the early and mediæval histories of our railroads. If properly revised and improved, it may be made to achieve a similar success in the present time.

The styles in bridge construction change from year to year, nearly as radically as those in ladies' apparel. We can recall the time when pin-connection pony trusses, lattice-girders, double intersection trusses, etc., were extremely popular. Just now, long plate girders are in great demand. There are but few bridge companies that cannot boast of having built a plate girder span from 105 to 110 feet in length.

The best metallic bridges of to-day are merely modifications of the simplest and best designs, which have long been known and used. It is believed that the Howe truss, with a few departures from the usual practice, can be made to fulfil the present heavy requirements.

One serious objection to the Howe truss of the past, and one

which has contributed largely to its disuse, is its extreme sensitiveness under the action of a modern train load. Such a bridge is a source of fear to the traveller, an eye-sore to an engineer, and a discredit to the railroad.

The principal cause of such an excessive deflection is the small ratio of the depth of truss to span. This flexibility, though not an absolute indication of serious weakness, is certainly one of faulty design.

If not too objectionable, I wish to introduce here a short mathematical discussion of the question of deflection, which, though quite theoretical, may help to point out more clearly its cause and aid us in its remedy.

Nomenclature.

l = length of span.
d = depth of truss.
W = total load uniformly distributed.
A = sectional area of the chords.
I = moment of inertia of the truss.
E = modulus of elasticity.
F = unit strain.
Δ = deflection.

Δ_s, E_s, I_s, F_s, A_s and d_s = the corresponding quantities for trusses made of steel.

Δ_w, E_w, I_w, F_w, A_w, and d_w = the same for trusses made of wood.

The want of a better expression for the deflection of a truss uniformly loaded compels the use of the following:

$$\Delta = \frac{W\,l^3}{76.8\,E\,I}.$$

Observations on existing structures, with parallel chords, have shown it to be a close approximation, and as it is about equally true for wooden and metallic structures, the final result is probably very nearly correct.

We may now write:

(1) $\Delta_s = \dfrac{W\,l^3}{76.8\,E_s\,I_s}$ = deflection of a steel truss.

(2) $\Delta_w = \dfrac{W\,l^3}{76.8\,E_w\,I_w}$ = deflection of a wooden truss having the same span and load as the steel truss.

The relation between these deflections may be expressed by dividing equation (1) by equation (2) as follows:

$$(3)\quad \frac{\Delta_s}{\Delta_w} = \frac{W\,l^3 \times 76.8\,E_w\,I_w}{76.8\,E_s\,I_s \times W\,l^3} = \frac{E_w\,I_w}{E_s\,I_s}.$$

The actual relation may now be found by substituting the value of the terms in the second number of equation (3). For the sake of convenience we will take:

$E_w =$ 1,500,000 lbs.	$F_w =$ 1,000 lbs.
$E_s =$ 30,000,000 "	$F_s =$ 10,000 "

I_w and I_s are proportional to the sectional area of the chords of their corresponding trusses, whose depths are the same.

This is more clearly seen from the following:

$$I_w = 2\,I_w' + 2\,A_w\left(\frac{d}{2}\right)^2$$

$$I_s = 2\,I_s' + 2\,A_s\left(\frac{d}{2}\right)^2$$

The sectional areas of the top and bottom chords have been assumed to be the same.

In these two equations $2\,I_w'$ and $2\,I_s'$ are so insignificant in comparison with $2\,A_w\left(\frac{d}{2}\right)^2$ and $2\,A_s\left(\frac{d}{2}\right)^2$ that they may be disregarded without seriously affecting the result, hence we may write:

$$I_w = 2\,A_w\left(\frac{d}{2}\right)^2 \text{ and } I_s = 2\,A_s\left(\frac{d}{2}\right)^2$$

Dividing the first by the second, we get:

$$\frac{I_w}{I_s} = \frac{2\ A_w \left(\frac{d}{2}\right)^2}{2\ A_s \left(\frac{d}{2}\right)^2} = \frac{A_w}{A_s}.$$

A_w and A_s are inversely proportional to their corresponding fibre strains; that is:

$$A_w : A_s :: F_s : F_w \text{ or } \frac{A_w}{A_s} = \frac{F_s}{F_w};$$

hence,

$$\frac{I_w}{I_s} = \frac{F_s}{F^w} = \frac{10{,}000}{1{,}000} = 10.$$

$$\frac{E_w}{E_s} = \frac{1{,}500{,}000}{30{,}000{,}000} = \frac{1}{20}.$$

The above numerical values of $\frac{I_w}{I}$ and $\frac{E_w}{E_s}$ substituted in equation (3) give:

$$\frac{\Delta_s}{\Delta_w} = \frac{E_w\ I_w}{E_s\ I_s} = \frac{1 \times 10}{20} = \frac{1}{2},$$

or $\Delta_w = 2\ \Delta_s$.

Therefore it is apparent that the deflection of a wooden truss is about twice as great as one of steel having the same span, load and depth of truss. This ratio, being dependent upon the moments of inertia and the moduli of elasticity of the materials, will vary.

Thus, for an extremely low value of E_w it will be found to be in the vicinity of $\frac{1}{3}$, and for a low value of E_s it will be greater than $\frac{1}{2}$.

This unwelcomed deflection may be lessened by a reduction of the unit strains, by increasing the depth of truss, or by a combination of the two.

Substitute $\frac{F_s}{F_w}$ for its equal $\frac{I_w}{I_s}$ in equation (3), and we get:

$$(4)\quad \frac{\Delta_s}{\Delta_w} = \frac{E_w\ F_s}{E_s\ F_w}.$$

In order to determine the unit strains in a wooden truss which will have the same deflection as that of a steel truss of the same span and depth, equation (4) must be made equal to 1, thus:

$$\frac{\Delta_s}{\Delta_w} = \frac{E_w\ F_s}{E_s\ F_w} = 1,$$

from which:

$$(5)\quad F_w = \frac{E_w\ F_s}{E_s}.$$

Leaving the values of E_w, F_s and E_s the same as before, and substituting them in equation (5), we get:

$$F_w = \frac{1{,}500{,}000 \times 10{,}000}{30{,}000{,}000} = 500 \text{ lbs. per square inch.}$$

On the other hand, to obtain equal deflections, while allowing the unit strains to remain the same, the moment of inertia of the wooden truss must be increased so that the value of equation (3) will become equal to 1. This is accomplished by increasing the depth of truss, as follows:

$$\frac{E_w}{E_s} \times \frac{I_w}{I_s} = 1, \text{ or } \frac{I_w}{I_s} = \frac{E_s}{E_w},$$

Since

$$\frac{I_w}{I_s} = \frac{2\ A_w \left(\frac{d_w}{2}\right)^2}{2\ A_s \left(\frac{d_s}{2}\right)^2} = \frac{A_w\ d_w^2}{A_s\ d_s^2},$$

$$\frac{A_w\ d_w^2}{A_s\ d_s^2} = \frac{E_s}{E_w},$$

from which

$$d_w^2 = \frac{E_s\ A_s\ d_s^2}{E_w A_w} = \frac{20 \times 1 \times d_s^2}{10} = 2\ d_s^2;$$

or,

(6) $d_w = d_s \sqrt{2} = 1.41\ d_s$.

If d_s is $= \frac{l}{6}$, $d_w = \frac{1.41\ l}{6} =$ about $\frac{l}{4.26}$.

This requires an unusually deep truss. In practice it would be best to avoid excessive deflection by using a much deeper truss than usual, together with lower unit strains.

The following table gives the length and depth of several spans of Howe truss bridge, which gave deflections from two to three times as great as steel structures under similar conditions:

No. of Spans.	Length. Feet.	Depth. Feet.	$\frac{l}{d}$
2,	140	20	7.0
2,	138	19	7.3
2,	138	20	6.9
2,	144	20	7.2
4,	150	20	7.5
2,	210	22	9.5

The mean value of $\frac{l}{d}$ is 7.56 or $d = \frac{l}{7.56}$.

Observe the vast difference between the theoretical value of "d" and that from practice.

Theoretically, $d =$ about $\frac{l}{4.26}$.

In practice, $d =$ " $\frac{l}{7.56}$.

For a span of 150 feet the theoretical depth would be about 35 feet, while, ordinarily, trusses of this length are given a depth of about 20 feet, a difference of 15 feet.

From this discussion the importance of making the depth of wooden trusses somewhat greater than those of steel is very evident. In the above table it is apparent that the depths used are even less than in the usual practice for steel spans of the same length.

The elevation of the bridge, in reference to the stream in all cases, was such that almost any depth of truss could have been used.

One of these bridges was composed of four spans over 100 feet above the water; another of two spans was 75 feet high; all were over small unnavigable streams.

Since it is advisable to have deeper trusses, it naturally follows that there should be fewer panels. It is customary to have the panel length at least half the depth of the truss, hence, the panels should be longer.

Again, the fewer the panels, the more directly the strains are transmitted to the abutments, a point well worth consideration. As the length of panel increases, the bending in the loaded chord will likewise increase.

To obviate this as far as practicable, the floor beams should be few in number, as deep as the timber will permit, and as close to the panel point as the web members will allow. Built beams may be used to an advantage, and help to accomplish the above.

Unless the panels are exceptionally long, from four to six ordinary floor beams per panel will suffice. The wide spacing of stringers is a means of relief to the floor beams, and may be adopted in the Howe truss with impunity.

Truss Rods.

In the recalculation of old Howe truss bridges the rods are almost invariably found to be the weakest members.

It is often with difficulty that the engineer accounts for the duration of the structure. In many instances, the calculated unit strains in the rods have been found to be very near their elastic limit. Occasionally the chords are somewhat weak, but the diagonals are seldom so.

The truss rods from an economical point of view should always have upset screw ends. A saving of 1000 pounds to 9000 pounds per span, depending upon the length, is made, as stated in the *Engineering News*, Vol. XXIII., No. 17, by Archibald A. Schenk, Chief Engineer of the Oregon Pacific R.R. For the sake of convenience in adjustment the rods should be provided with turnbuckles placed at such a height as to be easily operated.

All cast- or wrought-iron and steel in the structure should be thoroughly painted before and after erection, a thing which is invariably neglected.

Trusses Re-enforced by Timber Arches.

Perhaps one of the most common ways of strengthening a Howe truss bridge is by the introduction of timber arches, which thrust against the masonry. This mode of re-enforcement, though considerably better than none at all, is not so efficient as some have supposed it to be. A comparison between the actual strength of these arches and the strength which they are supposed to have is not so favorable as might be desired. If the load was always stationary and uniformly distributed it is beyond question that the arch would be a satisfactory means of support. Ordinarily the curve of the arch does not vary much from that of a parabola; hence under these conditions the bending strains will be comparatively insignificant. The only strains of any consequence are the shear and direct thrust, which are of no great amount in the arch itself; but the thrust against the masonry is frequently more than it can resist, not having been originally constructed for that purpose.

The conditions of an arch under the action of a moving load are radically different. Thus, for an arch with a train load upon only one-half the span, the bending moment is several times greater than when fully loaded.

Fig. 1 represents the moment diagram for an arch uniformly loaded throughout.

Fig. 2 is the same for an arch partially loaded. These diagrams are drawn to the same scale, and are for a 150-foot span whose rise is 20 feet. In the second case only four panels are loaded. Note the large bending moments on the unloaded as well as the loaded half; they are about the same in amount but of an opposite character.

Take for an example an arch whose section is 10 x 42 inches. Its maximum allowable bending moment with a fibre strain of 1000 pounds per square inch is $\frac{10 \times 42 \times 42 \times 1000}{6 \times 12} = 245{,}000$ foot-pounds.

When fully loaded as in Fig. 1 the corresponding panel load $P = \frac{245{,}000}{9.3 \times (\frac{1}{2} = \text{ordinate})} =$ about 52,700 pounds.

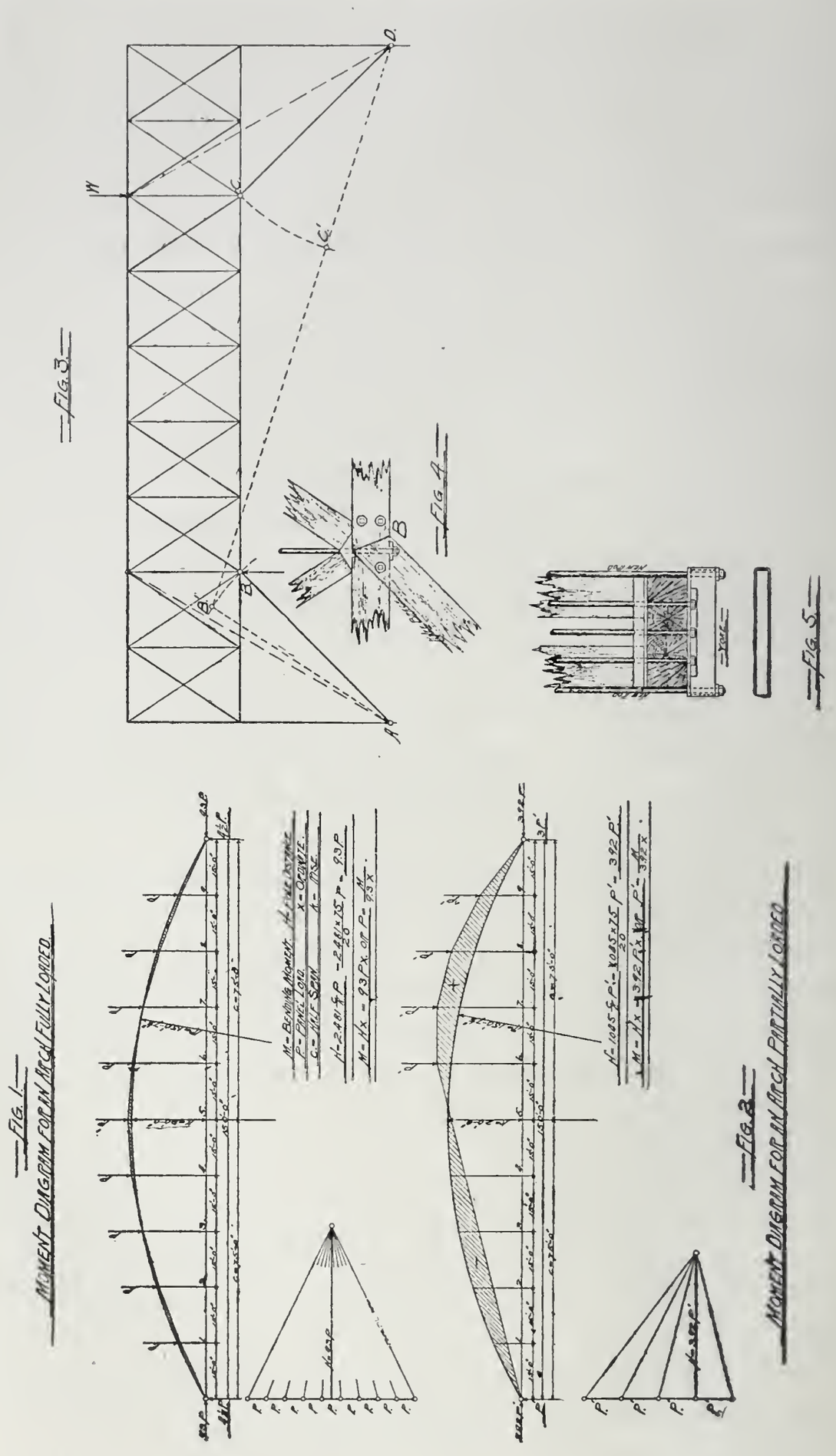
FIG. 1
MOMENT DIAGRAM FOR AN ARCH FULLY LOADED
FIG. 2
MOMENT DIAGRAM FOR AN ARCH PARTIALLY LOADED
FIG. 3
FIG. 4
FIG. 5

When partially loaded as per Fig. 2 the panel load $P =$

$$\frac{245{,}000}{3.92 \times (6 = \text{ordinate})} = \text{about } 19{,}000 \text{ pounds.}$$

In the first case the arch will safely carry a total load of $9 \times 52{,}700$ pounds $= 474{,}300$ pounds. In the second it will carry only $4 \times 19{,}000$ pounds $= 76{,}000$ pounds. The ratio is $\frac{474{,}300}{76{,}000}$ $=$ about 6.24. In other words the maximum allowable live load is about one-sixth of its maximum allowable dead load. The ratio of the panel loads is $\frac{52{,}700}{19{,}000} =$ about 2.8.

Timber arches as usually constructed are poorly adapted to the resistance of the bending strains which they are called upon to bear. They are built up with a few courses varying in thickness, insufficiently bolted together, and have frequently been made with two courses of timber, as in the old Hand Street Bridge in Pittsburg. Snch construction is not commendable on account of the lack of strength at the joints. Another example of faulty design in the arch, is one made with an open space between the courses.

Arches should be made very deep, of several thin courses, thoroughly bolted and keyed together, aside from having solid and reliable skew backs.

To derive the greatest benefit from an arch, its bending strains must be reduced to a minimum. To realize this, in arches which re-enforce a bridge, the ends of the trusses should be tied to the feet of the arches to prevent the unloaded half from lifting the end of the bridge. The trusses having been sufficiently strengthened to prevent this distortion, the result of the above will be more satisfactory than the usual way.

Knee-Braces.

Another method of re-enforcement (?) which is often employed in short spans, is the knee-brace or strut, one end of which sits in a pocket in the masonry and the other simply bears against the upper or lower chord of the truss. Figs. 3 and 4.

This contrivance, like the arch, would be of some service if

the load was always stationary and uniformly distributed. However, since the device is almost invariably excentrically loaded, the benefit which the trusses derive from it is more fallacious than real. Thus, if a single concentrated load be placed over the point "*C*," the only things to prevent distortion are the rigidity (?) of the joints and the weight and rigidity of the trusses. If the trusses should be broken at the points "*B*" and "*C*," so as to form three independent spans, the above condition of loading would cause the entire structure to collapse.

The points "*B*" and "*C*" being free to move in arcs of circles with "*A*" and "*D*" as centres, would travel as follows: At first the point "*C*" would fall; at the same time "*B*" would rise until "*C*" arrived at "*C'*," at which time "*B*" would be at its greatest height, "*B'*." When this position has been reached the entire structure will fall.

Since the joints offer no appreciable resistance, we are still left to the mercy of the trusses. By stiffening the trusses and making the anchorage similar to that of the arch, the knee-braces may be made to serve their purpose.

Additional Truss Rods.

The insertion of additional truss rods is another very common and necessary repair which is scarcely ever neglected. It is usually impracticable to substitute larger rods for those already in use on account of the holes in the cast angle blocks being too small; hence the necessity of additional rods. It is generally necessary to introduce two new rods at each panel point except near the centre. These rods pass through yokes of timber or metal, which bear against the upper and lower sides of the trusses.

When timber yokes are used, it is necessary to place them a little to one side of the panel point, to not interfere with the old rods, for otherwise these would have to be lengthened in order to pass through the yokes.

A more satisfactory detail is the iron yoke, placed directly at the panel point, and made to bear against wrought-iron or steel plates of such proportions as to properly distribute the pressure

over the chords. These yokes are made of bars set up edgewise, welded and bent into a rectangular shape, and having a portion of the top cut away to give access to the old nuts. Fig. 5 is a sketch of the above-described yoke, which has met the approval of many engineers in the east.

Splinting the Chords.

The chords may be strengthened by the addition of an extra strand on each side, thoroughly bolted and keyed thereto.

This is often done in connection with additional truss rods and new lateral and sway bracing. Within the limits of a brief observation, it has been hard to find an old bridge which has not been subjected to such a treatment.

The strength and stability of the bridges, when so repaired, are greatly improved.

To illustrate the nicety of the Howe truss bridge in the matter of maintenance, instances are recalled where broken angle blocks have been replaced, new and larger web members have been substituted, and portions of the top and bottom chords have been renewed without great expense or inconvenience to traffic.

It is an easy matter to increase the sectional area of each individual member of a shallow truss, thereby obtaining the proper amount of strength; but to acquire the desired degree of stiffness is a different matter.

Protection from Weather.

Extra precaution should be taken to protect the timber from the weather. By so doing the life of the bridge may be greatly prolonged and enough gained to more than meet the expense.

The sides should be boarded up and the cracks thoroughly battened. Perhaps the most satisfactory covering for a through bridge is the old-fashioned cedar shingle roof, sheet-iron or tin being objectionable on account of the corrosive action of the gases from the locomotives.

Considerable difficulty has been experienced in obtaining a water-tight covering for deck bridges. Sheet-iron or tin fails to give satisfactory results, notably on those roads which transport

Chicago beef; the brine from the cars causes rapid corrosion. Gravel decks are not much better, besides being inconvenient in case of repairing the bridge. A good covering, and one which fulfils the requirements as well as any, is one consisting of two thicknesses of pine sheathing laid to break joints, with a coat of paint on top and between.

Finally, it may be said that, under the proper conditions, the Howe truss, when well designed and properly built, is a serviceable structure, easy of maintenance and of moderate first cost, and well suited, even at this time, to cheap construction where timber is plenty.

Discussion.

Mr. Becker: I trust there are enough members still living who can say a good word for the old Howe truss bridge, which I am sure has carried many of you safely over. Still I must say that this paper reminds me a little of a funeral oration over a dear departed friend,—his virtues never become known until he is dead and gone. I should like to hear from some of the gentlemen who had experience in the olden days with Howe truss bridges.

Mr. G. S. Davison: I have not had much experience in building the Howe truss bridge. I built three or four some ten or twelve years ago and they are ready to come down now, largely due to the fact that precautions were not taken to cover them. While the paper was being read I noticed that the question of comparative cost had not been touched upon, and I have made a few figures which may lead to determining the comparative cost of a Howe truss bridge and an iron or steel bridge of the same strength and proportions. Taking Mr. Nichols' figures, and assuming that the wooden bridge and the iron bridge have the same general dimensions, and using his fibre-strain of 10,000 pounds for the metal and his 500 pounds for the wood, we see that the timber sections must be twenty times the metal sections for equal strength. Allowing 20 per cent. in timber over metal sections due to difference in allowing for decreased sections at joints, we would have the timber sections twenty-four times greater than the metal sec-

tions. With timber at forty-five dollars per thousand and metal at four and one-quarter cents per pound, their relative cost for equal strength would be as 54 is to 85, or the timber sections would cost about two-thirds of metal sections of equal strength.

The tie-rods that would be in the structure we have supposed in each case to be of metal, so that the strain and the cost would naturally be the same, but the necessarily heavy angle-blocks in the wooden structure would fully sustain, if not surpass, the above proportion of cost. The above proportion would probably hold good only between lengths of 50 and 150 foot spans.

Mr. Becker: I think the relative values between the two types would not be uniform. I am not speaking in the line of Mr. Davison's reasoning, but from my recollection as to the actual cost in dollars and cents. I do not know how many Howe truss bridges I have built. I have built a good many iron ones in my days, but I think it would be safe to say that at present prices of wood, which has, of course, increased considerably, while steel and iron have gone the other way, that the costs of the two come closer together, and that with a bridge 75 or 80 feet in length, of proper dimensions to stand the same service as is now required in our modern traffic, the cost of wood would be just as much as of steel, if not more, say of a plate-girder bridge of the same dimensions. I think as you go further up, they will go apart. I think perhaps in a span of about 150 feet Mr. Davison's ratio would be nearly right. Above 150 feet, for my part, I would not like to build a Howe truss bridge under any circumstances.

Now, while I am up, I would like to give my views of the applicability of this theory of flexure when applied to the Howe truss bridge. It is a very nice theory, indeed, and no doubt tells the truth if it is applied to a solid single stick; but when you come to put in 25 or 30 splices, and such splices as I have seen put in wooden bridges, I do not think that theory of flexure will pan out right. The old-fashioned way of splicing the chord-sticks of this bridge was simply to use hard-wood blocks, checked in an inch or so; and that was all there was to hold the pieces together, after running a bolt or two through. Later on, they invented several contrivances in the shape of metal splices; some of them

were keyed and driven in, some relied upon screw-nuts being tightened up; but, at best, these contrivances were of such a character that a careful calculator would always throw the splices entirely away in his calculations. In other words, when there were four sticks in the bottom chord of a bridge, as usual in a bridge of reasonable length, there would be a splice in each panel; he would figure on the strength of three sticks, and leave the other totally out. Now I think that was a little violent, but it was safe. I always did it myself.

So much for the theory of flexure. You get all these splices in the bottom chord, and you press fibre against fibre in the top chord, and I tell you your theory of flexure is not there, and when taxed with the train on, your truss will go away below the theoretical formulæ, in spite of all your mathematics.

Now I say at the present prices of good timber, such as would be fit to go into a bridge of that sort, the cost would be very materially increased, for the reason that there is a large waste in the construction of the Howe truss bridge which I think is not sufficiently considered. You take, for instance, four pieces of a chord (illustrating); suppose you make these pieces 8 x 16, which is a pretty good-sized chord. In order to get your packing in properly I would probably make the space between sticks not more than an inch. Now, then, what have you got to do in order to bring your brace-bearings in proper shape on a bridge which would have sticks 8 x 16 in the bottom chord? You would very likely have in the end-panels three tie-rods of not less than 2 inches, if not $2\frac{1}{4}$ inches, in the body of the rod, and I fully agree with you, they should be upset on the ends. At the bottom here you would probably have $2\frac{3}{8}$ inches, and then these rods go through tubes in the angle-block which is above here. When you take a 2-inch rod coming down here (illustrating), and then upset it in the screw, making it $2\frac{3}{8}$ inches perhaps, then leaving sufficient space for play, then give your metal about $\frac{3}{8}$ inch thickness in your tube, you are cutting off a large portion of your effective timber. It goes, and the loss weakens the whole structure; therefore, there is an economical limit in the Howe truss bridge on that score alone. You must have the strength in your tie-rods,

but you have to introduce it at the sacrifice of your chord-piece. That is a point of weakness that has always occurred to me as being the most troublesome feature of the Howe truss bridge.

But according to my experience, the thing that has given me more trouble than anything else, and has caused more deterioration in my estimation than even joints and splices themselves, is the shoulder of your braces. There is your angle-block (illustrating), then comes your tube. Now, then, what is there to take up the horizontal strain of your braces, which is very large—at the ends, particularly? You have nothing but the projection of this little piece of resistance here. What are you going to do? If you check it deeper and give it more resisting-surface, you weaken your stick again. In other words, when you want to strengthen that bridge in one direction you are bound to chop it off in another direction. Cast-iron is not made as well now as it was twenty-five or thirty years ago, and the makers send you all sorts of pot-metal if you don't watch them; the angle-blocks break frequently, in consequence, from the thrust of the braces.

When it comes to covering a Howe truss bridge it is just about another story of being between "the devil and the deep sea." If you cover them they burn and if you do not they rot.

Mr. Nichols: The Howe truss bridge may be a dear departed friend to some, but to others it will long be a beloved daily companion. It seems to me that those who have laid their friend away would have done better if they had dug the grave a little deeper, and thus have avoided being constantly haunted by those ghostly visions which are seen nearly everywhere they go.

It is not claimed that the theory of flexure will hold true when applied to trusses, either metallic or wooden.

One becomes aware of this when he obtains the deflection graphically, for the change in length of web members has a large influence upon the true deflection of the truss.

I should not advise any one to use formulas 1 and 2 with the expectation that the results would be satisfactory.

While the individual results are merely approximate, their ratio is not far from correct. It will be observed that the conclusions

drawn from the mathematical discussion are based wholly upon the ratio of the deflections of the two kinds of trusses; furthermore in finding the proper depth of a wooden truss, the square root of an approximate quantity dependent upon the ratio of the deflections is taken, hence the error in the final result is not so enormous as might be supposed.

It is true that the imperfect splices in the bottom chords increase the amount of deflection; and it is to be regretted that some one has not produced a fine-haired formula, based upon actual results, which will tell the truth.

The horizontal component of the strain in the braces is more than half taken up by the friction due to the vertical component, so it is hardly necessary to rob the chords of their needed section for the sake of notching the angle block in deeper.

On several occasions I have recalculated old Howe truss bridges, and, as Mr. Becker said, the strength of the splice was ignored entirely. The net sectional area of the four sticks at the panel point is about the same as that of the three whole sticks at the splice.

Mr. Becker: I have no personal experience as to the failure of any of these bridges on any line with which I am connected, except in a single instance. On the Tippecanoe river near Logansport there was a Howe truss bridge built by a man who had been foreman of carpenters on the line for several years. He was perfectly competent. The timber used was bought at Chicago of a good firm, inspected thoroughly. The bridge was put well together and stood for five years, but one day, in July, 1877, a freight train ran over it and broke through. The bridge was perfectly proportioned; the iron parts were large, and when subsequently tested were found to be faultless almost, and the only reason that I could ever assign for the failure was that it had been painted while the timber was green. Somebody undertook to protect it, as he thought, and put on a vilainous compound under the name of "four ace" paint. It was put on hot. It was a mixture of tar and I do not know what else, and it clogged the fibres on the outside of the timber so completely that before it was thoroughly seasoned no moisture that remained in it could ever get

out, and so it decayed internally. I found that the bottom chords particularly were rotten clean through. There was one span that had not been painted, and it stood there until four or five years ago perfectly sound.

I have no fault to find with the Howe truss bridge. I think it was the most perfect bridge of its kind that was ever used, and the inventor of it deserves great credit from the profession for the service these bridges have performed. I have known bridges of that type to stand the traffic of railroads for 40 years when kept completely covered and well framed at the start. We have some now that are over 30 years old, and they are so sound, that a few years ago when I cut off the end of a bottom chord-piece and brought it here and tested it, I found that it stood above the average of the best kind of pine timber that could be gotten to-day, both for compression and extension.

I would like to refer to the mode that is sometimes used for strengthening the Howe truss bridge by means of arches. That is a measure that has been resorted to in a great many cases. Its chief result is the destruction of the masonry at the skewbacks. We had some piers practically destroyed by the see-sawing of the arch bases against the piers, and it has always been my theory, that an arch of that sort should never be taxed with anything more than a certain excess load. It should be adjusted in such manner that it will carry no part of the dead load of the bridge, but simply come into action when the live load is on, and relieved when that load goes off.

The height of the bridges given here is hardly correct as an average. They are given as 20 feet each, which I suppose means the distance between centres of chords. Now, it is true, in olden times the smokestacks were not so high, and bridges were not built so high ; still, 20 feet is hardly enough. When you take 20 feet between centres of chords, then calculate your floor-beams and your stringers and your ties and your rail you would not have more than about 16 feet from the rail to the top laterals, and that would not let an ordinary locomotive through. They are generally about 23 feet high between centres of chords. I am speaking now of through bridges.

MR. NICHOLS: Those given in the table are deck-bridges.

MR. BECKER: That is good enough. I do not feel quite convinced regarding the ratio of deflection. Now, with eye-bars, for instance, you can adjust to $\frac{1}{64}$ of an inch in the borings, and that is more than any carpenter can do in the way of splices and bridge-chords. The elongation of the bottom chord of a bridge of steel or iron is a thing you can measure and determine, but you cannot determine a Howe truss bridge even when it is new, and still less when it gets a little worn.

I really did not think we would have any advocates of the old Howe truss bridge rise in this generation, although I am glad to have this matter brought up and discussed for its merits in the past.

MR. NICHOLS: Suppose the actual deflections of a wooden and steel truss are respectively $1\frac{1}{2}$ inches and $\frac{1}{2}$ inch, and those by the formulas are 2 inches and $\frac{5}{8}$ inch. In the first case the ratio is 3, in the second it is $3\frac{1}{5}$. The difference between these ratios is no alarming amount. It would make but a small difference in the final result whether you used 3 or $3\frac{1}{5}$.

MR. DAVISON: Speaking of strengthening Howe truss bridges with an arch, I could never understand how, in using the two systems, an arch and a truss, and especially in wood, each could be given its proper proportion of load.

MR. WILKINS: Some years ago I was in the office of the Master Mechanic of the R. W. & P. Railway, and saw hanging on the wall the model of a Howe truss bridge, and on inquiring what it was for, was informed that it was the method in the old days to make a model and calculate from it a bridge 20 times the span; in other words, they proportioned each structure from a model, instead of analytically calculating the strains.

MR. KAUFFMAN: The Howe truss bridge was patented in 1840 by William Howe. About one year afterwards Mr. Squire Whipple developed his theory for the calculations of bridges. This was not generally known until 1860, and until that time all bridges in America were designed as Mr. Wilkins has just told us; but after that engineers began to design them according to proper principles. There were a number of accidents with the

Howe bridges, as well as with others, before 1860; but after that time these began to decrease in number, and the Howe truss bridge gave a great deal of satisfaction, as we all know. But now the loads are so heavy and steel bridges have become so cheap, that it is not very economical to use them. I have not had much experience with them myself, but I have noticed that the deflection is three times greater than it should be, according to known formulas.

The usual trouble is that on most roads they are not properly taken care of. I know one bridge put up about ten years ago according to the latest design which is almost ready to fall down now on account of the bolts not being looked after.

Mr. Becker: The only trouble that the Howe truss bridge has caused that I know of is that some of the first iron bridge builders have imitated it. It was a good bridge to build in wood and iron combined, but it was not a good type from which to build an iron bridge.

Mr. Swensson: Belonging as I do to the iron age, my experience with Howe truss bridges is very limited, indeed. However I know that it is very useful for false work when you cannot put up the usual style needed for erection of an iron bridge. We have successfully used it several times, particularly down at the Beaver bridge on the P. and L. E. R.R. We used there three 150 feet spans and the only trouble we had was that the lower chord began pulling apart under the heavy load of traffic and part of the old as well as the new iron bridge. After the usual wooden key and bolt splice had been strengthened with an iron device it acted satisfactorily.

Mr. Becker: The longest Howe truss bridge I have ever seen, was built here at Saw Mill Run in 1861 or 1862. It was 237 feet long, built by the Keystone Bridge Company. It was an immense structure; well proportioned but a perfect wilderness of timber. It was a double intersection arrangement. That was the peculiarity about it. It stood there and carried the traffic for ten years, but was replaced in 1871 by an iron structure of two spans of 118½ feet each.

Adjourned.

R. N. Clark,
Secretary.

FEBRUARY 28TH, 1893.

MEETING OF THE CHEMICAL SECTION OF THE ENGINEERS' SOCIETY OF WESTERN PENNSYLVANIA.

Mr. Joseph H. Eastwick, Chairman, Mr. James O. Handy, Secretary. Thirty-four members were present. The minutes of the January meeting were read and approved. Five applications of chemists for membership were announced as being under consideration. Miscellaneous communications from members were read by the Secretary: "On The Apparent Weathering of Pig-Iron," by Mr. A. B. Harrison; "Properties of Very Pure Iron," by Mr. Charles J. Pedder; "Solubility of Barium Sulphate in an Acid Solution of Ferric Chloride," by Dr. Charles B. Dudley.

Mr. Walter E. Koch gave an address on "Segregation in Steel," which was discussed by Messrs. Clark, Hopke and Camp.

Mr. R. N. Clark read a paper "On the Use of Bone-Black in Domestic Water Filters." The paper was discussed by Messrs. Koch, Roberts, Hopke, Phillips and Handy.

Mr. Clark requested the contribution of analyses of water from the vicinity of Pittsburg to supplement his paper. Mr. Thomas P. Roberts requested the appointment of a committee of five from the Chemical Section, to co-operate with the committee on Water-Supply recently appointed by the Chamber of Commerce.

On motion of Professor F. C. Phillips, the chair appointed Professor F. C. Phillips, Messrs. R. N. Clark, Philo Kemery, Theodore M. Hopke and James O. Handy to be members. The President of the Society was requested to appoint five engineers to serve with the above committee in determining the quality and quantity of the water supplies of the vicinity.

SEGREGATION IN STEEL.

BY WALTER E. KOCH.

THE method I have used for the last twenty years for the determination of sulphur in steel and pig-iron, is to take sulphuric acid, one part; water, four parts; mix and when cold, pour on to

five grammes of steel or iron in a flask, and pass the evolved gases into a cold saturated solution of cupric sulphate. In a few minutes you can tell just how your sulphur stands; it works better for steel than pig-iron, but is a very useful quick method for both.

The following remarks refer to open-hearth steel:

As regards segregation in steel, away back in the '70's, we were making high phosphorus steel rails; here is the analysis of one:

	At surface.	1 inch from surface.
Carbon,	.13	.15
Phosphorus,	.28	.46
Sulphur,	.06	.06
Manganese,	.60	.62

In steel plates I have found similar conditions. Here is one that cracked after being built into a boiler about the year 1880:

Carbon varied from,	.07 to .13
Sulphur varied from,	.08 to .150
Phosphorus varied from,	.04 to .06
Manganese varied from,	.60 to .68

This plate was rolled from a slab hammered out of an ingot about 18 inches thick. This led me to make a great many experiments, with the following results; that in plates rolled from large ingots, I found a distinct segregation of phosphorus, sulphur and carbon at the centre of the plate. I obtained my samples from the pieces cut out of the plates for manholes. The variation both in chemical analysis and physical properties was very great, especially in plates over 1 inch in thickness. In one case, that of a boiler-plate $1\frac{1}{2}$ inches thick, a piece cut from the centre would not bend at all, but was quite brittle—this plate was rolled from a slab 8 inches thick, hammered down from a 20-inch ingot. In another case a plate showing .15 per cent. carbon and .045 per cent. phosphorus on the edge gave .22 per cent. carbon and .07 per cent phosphorus in the centre and a

piece cut from the centre would not bend but broke. I have analyzed steel which has "bled" from large castings and ingots stripped too soon and found ample proof of segregation of carbon, phosphorus and sulphur. It seems to me that carbon is about the most shifty of all. I have found .40 and .58 per cent. carbon in the same rail and .55 and .75 per cent. carbon in the same tire—and as every one knows it is liable to vary widely in the same ingot, especially the larger ones, say over 3000 pounds in weight. The moral of all this is—dead melt your steel, and pour as cold as you dare, and keep your ingots as small as you can. I think a great deal of this trouble is due to the irregularity of the modern pig-iron. In the old slow-working blast-furnace, we used to get our iron regular in silicon, graphitic and combined carbon, and we could work it in the steel furnace to such a nicety that every charge would require the same amount of ore, etc., to yield the same grade of steel. Now we hardly ever get two heats to work alike. Pig-iron from the same car-load will require different treatment, the pig-iron is not properly graded at the blast-furnace and the variations in silicon and combined carbon in the same cast cause a good deal of trouble to the melter.

Quantity and quality rarely exist together.

Discussion.

Mr. R. N. Clark: Probably, the inequality of the pig-iron is partially due to the inequality of the ore.

Mr. Koch: I do not think so, because we are using the same ores in our furnaces as were used twenty years ago.

Mr. Clark: Are not the mines being forced to such a point that bad ores are being shipped and occasionally get into the furnace? It is not the fault of the blast-furnace only, but the fault of the charge that goes into the furnace. Sometimes, the mine is so pushed that the men are not able to select the good ores as was the case when the mines were quietly worked. When the demand on a mine is a thousand tons a day, the ore has to be taken out quickly; when only two hundred tons a day are demanded, the good ore can be selected.

Mr. T. M. Hopké: I am inclined to take a rather different view from Mr. Koch. I do not quite see why it should be due to the pig-metal only; but, rather to conditions under which the steel is cast. I fully agree that the silicon differs very largely in the same cast of pig-metal, but trouble from that source will be entirely eliminated in the open-hearth furnace. We have come across segregation from time to time; we always found that segregation takes place in the centre of the ingot, as Mr. Koch says, but more especially at the top of the ingot, and my idea of it is (it is entirely my own idea) that the elements that are usually found in steel, carbon, manganese, silicon, sulphur, and phosphorus, although chemically combined with the iron, form carbides, phosphides, etc. (manganese being alloyed with the iron). These carbides, phosphides, etc., are then disseminated throughout the mass of molten bath, or ingot, as the case may be, I take it. And, in the case of making large ingots, where segregation mostly occurs, the steel is often made a little bit hotter, and so takes so much longer to cool when cast in moulds, that these elements gradually work to the top, owing to their lesser specific gravity. One of the first things I was taught about phosphorus was, that, of all the elements usually found in steel, phosphorus was the most evenly distributed; but my ideas were very quickly changed as experience taught me differently. I find that it is distributed very irregularly.

Mr. Koch: A most extraordinary thing happened the other day, the first time I have met with it since I made the first heat in an open-hearth furnace. A little tail or knob was left on the bottom of a small ingot, 18 by 7 inches, and weighing 600 pounds. The ingot was cast on Monday, and lay around till Thursday, and it was then dead cold. I told the boss at the furnace to knock that tail off, because it would develop into a thin plate. So he took a hammer and struck it a blow; it flew off with a loud report like a gun, and out shot a jet of blue flame. The boys all ran away, thinking it would explode. That blue flame had a yellow top to it, and as it burned it became yellower and shorter, finally going out. It burned for half a minute or so, and there was a little cavity at the back of the ingot where the tail had been knocked off.

Mr. James Camp: I have seen a case like that, where the ingot was cold, and put into the skull-cracker and broken, and a ball in dropping ignited the gas and burned. The ingot had been lying around for quite a long time—a week or so.

Mr. Hopké: I might add one thing, bearing on the question of segregation. We have had, from time to time, so much trouble in getting uniform results in the laboratory, that finally I adopted this plan: we always cast a small test-ingot, 3 by 3 inches in section, and 12 inches long; that ingot is then rolled into a 1-inch bar, and a piece of this is taken to the drill-press and drillings taken for analysis; and I have instructed the boys always to drill in about one-eighth of an inch in order to get well away from the surface, and then take the drillings from the interior for analysis; to get good clean drillings, and do the same thing always, so as to have everything done exactly alike every time, or, in other words, always maintain uniform conditions in taking sample for analysis.

THE USE OF BONE-BLACK IN DOMESTIC FILTERS.

BY R. N. CLARK.

Some years ago, while in active service in Colorado, my attention was called to a form of pocket filters formed of bone-black; they were brought to us from England, and were said to be made especially for the use of the officers of the Anglo-Indian service. The filter proper was a flattened sphere, about four inches in diameter and an inch or more thick; it was made of two concaved disks of bone-black formed by compression, perhaps after the addition of some cementing material which did not interfere too much with the porosity of the mass. These disks were joined at their edges; the inside was connected by means of a short metal nipple to a rubber tube, perhaps two feet long, having an exhaust-valve at a suitable place in its length. These filters became one of our most cherished conveniences in our rough camp life; for, if the filter proper was placed in a kettle standing, say on the end gate of a wagon, filled with no matter how muddy water, and the

valve worked a few times, a clear stream would be syphoned into a kettle on the ground. It required no attention; and in a short time it gaves us all the drinking and cooking water needed for our mess.

But after a few weeks of use the pores of the filters became clogged with mud, and the decreasing amount of water drawn through them was offensive, foul to taste and smell. It was impossible to clean them by attempting to draw clear water through them; all attempts to purify them by heat was fatal, for they would fall to pieces; and worse of all we found that they were partially the cause of increasing sickness.

In a life like ours potable water was a necessity; pure air we had, but at such elevations but little of it, so that living chiefly on meat, bread and coffee, and especially on meat, deoxidization was not thorough, perhaps ptomaine was formed in our systems, at all events the much dreaded mountain fever was prevalent, even the most careful of us not always escaping. So then if any one ever had an objection to the use of bone-black for water filters it was myself. This objection is not a personal one only, for recently, for the above and other kindred reasons, even our usual encyclopædical literature has joined in the outcry against its use. In this paper I wish to call your attention to the fact that this opinion which has grown into a prejudice should not exist, for I find that when bone-black is properly used it is a most desirable material. I should add that I understand that the medical department of the English army has since reported against the use of the pocket filter just described.

My attention was again called to this use of bone-black in the autumn of 1887, when the Cummings Filter Company began to ship their filters to the Pittsburg Rustless Iron Works to be barffed. I became interested in them, so that after an investigation covering eighteen months, I had one placed in my house in June, 1889. Since then it has been running constantly, always yielding clear water, no matter how muddy the water has been with which it was fed.

The filter consists of two cast-iron cylinders, each 54 inches long, 18 inches inside diameter; they stand side by side on their

ends, having cast-iron tops and bottoms. (Illustrating on blackboard.) Near the top and bottom of each cylinder is placed a perforated diaphragm; the cylinders are filled within say, a foot of the upper diaphragm with bone-black, 220 pounds in each. The water supply pipe of the house is connected with the heads of both of the cylinders, the water passing into them is evenly distributed through the upper diaphragms, so that its velocity is greatly lessened when upon the opening of any cock in the house it is drawn through the bone-black. The outlets of the cylinders are connected into one pipe. Near the base of the cylinders and between them is placed a manipulator; when in operation its lever handle is pointed straight forward. When washing out the filter it is moved a quarter around, then the water pouring through one of the cylinders and cleaned by so doing, is forced upward through the bone-black in the other cylinder, and passing out at the top through what is usually the intake-pipe is permitted to escape through a bib-cock fastened to the manipulator; it carries with it the mud which has been collecting chiefly at the top of the bone-black, and the impurities which have collected in the mud. Escaping it empties into a cast-iron bowl which is connected with the sewer system of the house. By watching this escaping water it is easily seen when the water is clear. Then the lever handle of the manipulator is turned in the other direction, and the second cylinder is cleaned out with clear water received from the first one. Of course, a system of pipes are in place, all of which are connected with the manipulator, which may be considered a three-way valve. I have now described two forms of filters, in both of which bone-black is used. In the pocket filter form, each particle is held firmly bound to its neighbors, the whole mass is a solid, no means are offered to clean it; this form of use is disastrous. In the larger filter the bone-black is loose, a good means of cleaning it is easily and correctly applicable; this last form is advantageous and correct.

During the forty-one months in which my filter has been in use I have taken the opportunity to obtain samples of bone-black from it. I also have obtained samples from many others in use; in no case have I found them fouled.

On the third of February, a date just passed, the filter had delivered 805,140 gallons, by estimate, of clean water to my household. This estimate is made on an allowance of sixty * gallons per day for the number of my household. This work had been accomplished without any renewal of the bone-black, 440 pounds of bone-black cleaning 6,840,000 pounds, estimated, of water. If the continual use of bone-black fouls water, renders it unpotable as so often stated, and that too on authority, now was the time to prove it. So on the morning of February 3d I drew two samples of water practically at the same time, one of unfiltered water, the other filtered; these were dispatched to Professor Francis C. Phillips for analysis; he was prepared to receive them. Without loss of time the analyses for the ammonias and nitrogen in nitrites were made. The result is as follows:

WESTERN UNIVERSITY LABORATORY.

PITTSBURG, FEBRUARY 16TH, 1893.

Results of examination of two samples of water received February 3d, 1893, from Mr. R. N. Clark:

	Per 100,000.	
	Unfiltered.	Filtered.
Total solids,	24.0000	8.1400
Loss on ignition,	3.2800	2.4300
Hardness,	4.6400	4.6400
Hardness after boiling half hour,	3.9300	3.9300
Nitrogen in nitrates,	.0028	0.1140
Nitrogen in nitrites,	trace.	trace.
Chlorine,	4.3000	4.3000
Free ammonia,	0.0070	0.0020
Albuminoid ammonia,	0.0200	0.0040

The unfiltered water was exceedingly muddy, and probably contained nearly the maximum quantity of sediment likely to occur at any time in the Allegheny River water. The filtered

* Sixty gallons seems to be assumed as a correct estimate by water engineers for New England household practice; I find it to be a minimum allowance. See *Engineering Record*, February 17, 1892.

water was very clear, and deposited an insignificant trace of sediment after standing forty-eight hours. A comparison of the analytical data in the case of the two samples warrants the following conclusion concerning the action of the filter.

A reduction to one-third has occurred in the proportion of total solids. As the evaporated residue in the case of the filtered water is of a pure white color, it probably represents merely the dissolved mineral solids, the floating sediment having been almost wholly removed. The hardness of the water has not been changed.

It is hardly necessary to state that the chlorine is not a factor as regards the action of the filter. The two results are merely duplicates, and it is only of interest as bearing upon the original condition of the water.

The most important result appears in the reduction of the proportion of free and albuminoid ammonia, which has been converted into nitrates. This signifies a great improvement of the water as regards organic matters.

The original unfiltered water, on the day when the samples were taken, was decidedly impure. The filtered water was, in every respect, of very excellent quality.

Yours very sincerely,

(Signed) FRANCIS C. PHILLIPS.

The result of the analyses is so astonishing, so contrary to the opinions of all of us, that I believe it is worth while to dwell on this subject.

First of all, bone-black, or animal charcoal, as it is sometimes called, is the black carbonaceous substance into which bones are converted by calcination in closed vessels. It is chiefly used to discolor sugar and the like. As found in commerce, it varies considerably in its discoloring power, which arises from its having been exposed either to too great heat, which has glazed its carbon, or too low heat, which has left its gelatine imperfectly decomposed. Under the eye it appears to be highly glazed. Under a pocket-glass it is seen to be indented, it looks not dissimilar to a piece of soft coke as seen by the naked eye; it is porous. I have before me a sample for your examination of the bone-black given

me by Mr. Cummings; it is such as he uses; it is approximately sized and is quite fine.

All of it passes through a sieve of 400 mesh in square inch; 12.45 per cent. remained on a sieve of 900 mesh in square inch; 65.00 per cent. remained on a sieve of 2500 mesh in square inch; 18.00 per cent. remained on a sieve of 5746 mesh in square inch.

Its composition, as given me by the manufacturer, is about as follows: Phosphate of lime, 81 per cent. to 82 per cent.; carbonate of lime, 6 per cent. to 8 per cent.; carbon, 9 per cent. to 10 per cent.; nitrogen, 0.15 per cent.; iron, as sulphuret or oxide, 0.1 per cent. to 0.5 per cent.

Prof. Phillips found this sample to contain 81.9 per cent. of ash on burning in a platinum dish. Its specific gravity when water-logged—and we must remember that it is a porous body and soon becomes water-logged when in this use—is 2.64. It is said to possess the property of taking mineral salts and organic impurities from water. But since it possesses this property, why is it that in my filter it has not contaminated water which has recently passed over it? It cannot have absorbed such a bulk of impurities as have passed. I know that it has not been renewed or freshly burnt. It must have been frequently and thoroughly cleaned. It is my practice to clean alternate cylinders each week in the way I have described. This is all that has been done by any one to it, and yet this simple means of washing not only washes out the mud, but has washed out the organic impurities as well. If this was not so, I would have delivered a most unpotable filtered water on the date I took the samples for analysis.

Let us recall the condition existing in the inside of the cylinders. The bone-black is contained within two diaphragms, but does not fill the space within twelve inches of the top; it is lying in water loosely, not packed. When cleaning out, the water pours through the bottom, lifting in its flow each particle and displacing it as it does so.

Now it is well known to all who have worked in concentrating mills that the buoyancy of a body depends not entirely upon its specific gravity but also on its form. As an example of what I refer to, we all know that mica, with a gravity of 2.8, will float

off in a slow current of water, while feldspar of a little higher gravity will sink. So in practice we often lose the plates of freibergite, valuable on account of containing perhaps 15 per cent. of silver and gold, with a gravity of about 5, while the practically valueless and often detrimental crystals of iron pyrites of the same gravity are saved, and that, too, after due care in sizing.

We know that the bone-black is dashed about in the cylinder when being cleaned for the simple reason that a perfect upper diaphragm is necessary; if the diaphragm is torn, the bone-black pours off with the escaping water. But in filters in which sand is used, and sand has practically the same gravity, the upper diaphragm is absent in practice. Sand, therefore, is not buoyant. This is one reason why bone-black is desirable; it is buoyant. Another reason why it is preferable to sand is, although neither pack, the particles of sand quickly become cemented by the chemical action of the carbonate and sulphate of lime and magnesia in the water; bone-black is not cemented.

The chemical change of the ammonias and nitrites into nitrates is unquestionably due to the presence of the very valuable and omnipresent bacteria. All air, all common waters contain these forms of life; their mission is simply to always assist oxidization. Their habit is to form colonies, especially in their natural habitat, mud. We can readily imagine not only the accumulated mass of mud, collected on the upper face of the upper diaphragm and on the top of the bone-black, but the mud as well in the interstices of the flakes of bone-black prolific with these colonies. When the filter is cleaned, and cleaned it should be frequently, the bacteria are swept out with the mud. For some time after cleaning this chemical purification cannot then be so decided. It is the old paradox, proved by Koch and others, partially dirty sand or any partially dirty filtering material gives the best results. Sterilized sand is impotent.

The results of all investigations in regard to filtration have proved that a slow flow of a limited amount of water is necessary, and that this filtration should be quickly followed by complete aeration of the filtering material. For an interesting paper on this subject I would refer you to a paper read before the Academy of

Science and Art of Pittsburg, on "Purification of Water," by Professor F. C. Phillips, May 1, 1891.

But in this household filter I had rapid and intermediate filtration, without cessation or aeration during a period of forty-one months, and that not only with clarification but purification to date.

The question of the value of any filtering medium is computed on the area of the interstices between its particles. A very careful examination of this size of bone-black has demonstrated that practically 66 per cent. of the mass occupied by it in this filter are interstices and pores. The same character of experimental investigation on such sand as is used in sand filters, shows that 34 per cent. of the mass is occupied by interstices.

It would be imprudent for me to close this paper without calling your attention, that nowhere have I intimated that this remarkable purification of water as shown by the above analyses is constant; nowhere have I intimated that all sorts of water can be rendered potable by filtration; nowhere that house filters should be depended upon in such cases as often arise when the water-supply is contaminated with the germs of sporadic disease.

Boiled water is potable under most conditions, and under no condition that I know of is a filter a germicide.

Discussion.

Mr. R. N. Clark: In starting the discussion on water filtration, I will say that in the notices sent out it was suggested that the subject of the chemical values of the waters in the neighborhood should be made supplementary to this paper. Our reason for doing so is this: During the cholera scare last spring, the subject of the water we were drinking in the cities of Pittsburg and Allegheny came to the fore as it always does under such circumstances, and the members of the Engineers' Society expressed a desire that our Society should take this subject up fully and thoroughly. I do not know a better way than by starting in the Chemical Society. In this way, we can prove, at all events, the quality of the waters.

I would like to speak of one or two of the analyses of waters in

this neighborhood. All of us who live in the East End near Shadyside, should be interested in the water from the "Graystone Spring;" it is on Fifth Avenue, where Hiland Avenue opens on Fifth Avenue. Mrs. Howe piped the water from this large spring down to the sidewalk, and it flows out in a constant stream through a "goose-neck." It is used very considerably by all the passing people in the neighborhood, especially by the gripmen and conductors of the street cars. I have noticed that those street car conductors and gripmen who are always in too much of a hurry to stop and take a man on, are never in too much of a hurry, in warm weather, to stop and take a drink at this spring. The spring is wonderfully free from all organic matter. It is remarkably cool, and a very nice water to drink in summer weather. The analysis given by Dr. Wuth, shows it contains 22 grains to the gallon of salts of lime and magnesia. This spring is on the hill called "Squirrel Hill," which is bounded on the north side by Fifth Avenue, and on the south side by Forbes Street. That hill is a very strong lime-shale hill, and is very prolific of springs from one end to the other. The waters from all of those springs are, of course, naturally very good, but the waters from many of them are badly contaminated with sewage, and unfit for use. However, in coming towards the city, westward from the "Graystone Spring," to where the hill slopes off at Craft Avenue, on the property of the Pittsburg Hospital for Children, there is a very large well, and the directors of the hospital found that the grounds were constantly being overrun by all the workmen in the neighborhood sending up, especially in warm weather, for pails of water for their family use. They therefore determined to lay a pipe line to Forbes Street. Before doing so, they submitted a sample of the water to Hunt & Clapp, who, with their usual generosity, made the analysis, and that analysis shows, in my opinion, that the water is approaching the danger line. The analysis shows: Total solids, 20; nitrogen as nitrates, .69; chlorine, 2.13; albuminoid ammonia, .004.

I want to call your attention chiefly to the presence of chlorine. You will notice it is not so great as it is in the unfiltered water, which was analyzed by Prof. Phillips, in which he says the chlo-

rine is not a factor in the purity of the water. That is so with the Allegheny river water, because large manufacturing establishments and salt wells are delivering into the river a large amount of salt; but when a limestone spring is found (as Dr. Wuth found it) not to contain much chlorine, and then, in the water of another spring in the same belt, a short distance off, chlorine begins to be largely present, it is suggested at once that the water may be contaminated.

As we all know, the water-rates in the city of Pittsburg are very high, so people who own large buildings down town have driven wells in their buildings, and obtain from these wells water of very great clearness, if we can call it water; I think we cannot; it is simply a lot of salts and sewage held in a slight amount of water. However, these waters are not supposed to be drank; they are very useful, of course, for the purpose put to. For instance, the Union Storage Company, near the Point, have a well in which the solid matter is very high. They are manufacturers of ice. They distil their water, and before passing it into the freezing apparatus, have to cool it, and that is done simply by pumping an immense amount of cold water on it when passing it through a system of coils or cylinders and they use this well water for cooling only. It is a question of temperature, not a question of purity. It was supposed by the architects and sanitary engineers that the first water drawn out would be the worst, and that the water would become purer. The fact of the matter is that the longer these wells are in operation under these buildings the worse the water is. The flowing of the water seems to draw in an increasing amount of salts, which are getting so heavy as to be ruinous to boilers, and not only that, but the sewage seems to be increasing.

THE CHAIRMAN: I would like to ask whether or not there are any strata found in the neighborhood of Pittsburg that can yield pure water at any depth.

MR. CLARK: No chemically pure water. At Brushton, driven wells have been sunk which render quite potable water, moderately free from all mineral salts, but I do not know any place in this part of Pennsylvania in which pure water can be obtained. Back of Uniontown and through that neighborhood, in the sand-

stone districts, one can find almost chemically pure water. The purest water sold in this city is the Cresson Springs water. It is a lime water, free from sewage.

Mr. J. O. Handy: In regard to the waters of this vicinity, I found it to be characteristic of all (except those into which the waters of mines have flowed) to contain carbonate of soda, especially the salt waters. The proportion of carbonate of soda sometimes runs up to 30 or 40 grains to the gallon. I also find that we cannot calculate, from the amount of free ammonia found in deep wells drilled in and about the city, the purity of the water. Where wells have been driven through rock, and there is no possibility of surface contamination, the amount of free ammonia frequently runs up to two-tenths of a part in 100,000—a great deal more than is found elsewhere, except in sewage or contaminated waters. These deep well waters contain solid matters equal to 100 parts in 100,000, consisting mostly of common salt and calcium chloride, but I have it on good authority, and from others who have had more experience than myself, that their free ammonia probably comes from the coal measures with which the water comes in contact. The nitrogen is derived from that source, and is not significant of contamination by waste matters of animal life.

Mr. Hopké: The question of water analysis is one I have taken great interest in from time to time, and more especially before I came to Pittsburg. While in New York city, I had a commercial laboratory, and used to make water analyses. Since I have been in Pittsburg (during the past six years) I have had occasion, from time to time, to make analyses of the Monongahela river water. At the mill where I am engaged we take the water for use in the mill from the Monongahela river. About three or four years ago, a railroad company started to lay a track along the front of our mill property, and in order to get a good roadbed filled in with blast-furnace cinder. The crib on which we had our pump placed (we pump the water to a tank) was then alongside of this railroad, and I noticed that the water began to be very impure. My attention was first called to it from the fact that in using this water in the laboratory, simply condensing the

steam from the boilers to make distilled water of it, I found one day that the percentage of sulphur in my sulphur determinations was running very high. I investigated the subject, and found that the water was dissolving the sulphide of lime out of the blast-furnace cinder which had been used for making the roadbed of the railroad, and that the sulphide of lime was in turn decomposed, sulphuretted hydrogen being liberated, which was finally oxidized to sulphuric acid; this was conveyed through the entire system of water-pipes and steam-pipes, and ate out all the connections. That accounted for the high sulphur percentage obtained in my analyses in the laboratory. Then I made an analysis of the water near the place from which we took it into the mill, and, for the sake of comparison, took a skiff and went out to the middle of the river and took a sample of the water; also, got samples of the Allegheny river water; and I found that the water from the Monongahela river in mid-stream compared very favorably with the water taken from the Allegheny river. This was in the year 1889 or 1890. The water taken from near the shore in the Monongahela river showed where the contamination occurred. My recollection is, that the water we were then using in our boilers contained 32 grains to the gallon of solid matter, and the water taken amid-stream ran from 9 to 10 grains to the gallon, which compared very favorably with the water from the Allegheny river.

Prof. F. C. Phillips: How long did that condition in the water last?

Mr. Hopké: It continued for nearly a year, because the cinder was being filled in slowly, more being dumped in every day, until finally a solid roadbed was obtained. I suppose the roadbed is 60 feet wide at the base, probably 30 feet wide at the top, and must be nearly 30 feet high. Since then, we have run a water-pipe out further in the river, so that the water we are now getting is all right.

Mr. J. O. Handy: I have not received any contributions of analyses in response to our circular, but I expect they will be coming in now. I am able to furnish about 75 analyses from the records of the firm in whose employ I am, of waters of this vicinity.

Mr. T. P. Roberts: I would like to state that I have an analysis of Monongahela river water recently made under somewhat peculiar circumstances. The analysis was made by Prof. Phillips, and I received a letter from him yesterday asking me to appear at the meeting of the Society to-night and make an explanation of the occasional phenomenon we have in the Monongahela river, and also in the Youghiogheny river.

The conditions under which I took the sample are these:

It sometimes occurs in this usually muddy river that the flowing water is clear. At such times of clearness fish die. I thought that the water was deprived of oxygen. I now believe that sulphate of iron coming from the coal mines in solution has clarified the water and killed the fish.

I shall read the letter of Professor Phillips:

My Dear Mr. Roberts:

I send you report of examination of the water samples you recently brought to laboratory.

The result is very interesting, as it shows the water to be remarkably pure; much purer than the Monongahela water is ever known to be as regards organic and mineral matter. I was quite surprised to find the hardness so low, as I rather expected from the changes which occur to find the hardness greater than that of the river at Pittsburg. The water is as clear as distilled water and deposits no sediment whatever.

I regret that I have been unable to take up the question of dissolved oxygen, as I find the water samples you brought are fully ærated. This may come from air having been taken up during transport of samples. This is so hard to prevent that it is almost impossible to make a test for oxygen except by applying the reagents when the bottle is filled. The curious fact of the destruction of fish I am therefore unable to explain, except on your supposition that temporarily the water has been deprived of its oxygen by iron from the pyrite in the coal. In cold weather this condition (insufficient æration) would probably be of short duration, as the constant sinking of water from the surface tends to carry air down to the bottom. In hot weather such a condition is

more likely to occur. However, if such a state existed for half an hour it might destroy numberless fish.

	Parts per million.
Total solids,	55.7
Hardness (expressed in parts of carbonate of lime),	47.0
Free ammonia,	0.02
Albuminoid ammonia,	0.02
Nitrogen in nitrates,	2.0
Nitrogen in nitrites,	insignificant trace.
Oxygen consumed,	2.92

FRANCIS C. PHILLIPS.

I presume I am correct in my assertion which I have frequently made in regard to the water, that at such times when it is artificially clarified in that way by iron, it is wholesome. I presume all forms of life in water, animal as well as vegetable, would be destroyed if it contained no oxygen. No ill effects were observed, as far as I can understand, last fall, when the South Side people were using this water; in fact, the health of the South Side was unusually good at that time.

MR KOCH: The pocket filters mentioned by Mr. Clark were used in the Franco-German war. They did very well at first, but soon there was an outbreak of typhoid fever, and the order came to throw them away. They were thrown away, and the fever ceased, proving exactly what Mr. Clark says about the pocket filter. But there is one filtering material which, in my opinion, is the best I have seen. It is known as spongy iron. I do not know whether you recollect, but there was much said about spongy iron some years ago. In some Swedish lakes the water is abnormally pure. You can see to great depths, and little masses of iron can be seen gathered together at the bottom of the lake. Then in Scotland, you know how pure the Glasgow water is which is brought from Loch Katrine. It is so pure that you do not need distilled water for ordinary laboratory work. The water that goes into Loch Katrine contains vastly more solid matter than after it has been in the Loch for a short time, and if you investigate, you

will find the bottom of the Loch covered with a moss or mossy substance, a kind of organic matter, and that covered in turn with hydrated oxide of iron. Loch Lomond water is very good too. One winter I went inside one of the boilers of a Loch Lomond steamer. I found it coated with a glossy black substance more like coal than anything else. I knocked off a few chips of it, and it seemed to be a form of silicate of iron, but it was slightly magnetic. The boilers have been in use—I am afraid to say how many years, and the plates were of the same thickness as when first put in, plus this glossy black deposit on them, showing the advantages of using good, pure water in boilers.

My own idea is that we ought to do as the Romans did. The Romans were never such fools as to drink river water; they brought their water from the fountain head. Seville has obtained its supply of water from the Roman aqueduct.

Mr. T. P. Roberts: At the last regular meeting of the Chamber of Commerce, a committee of three members was appointed to confer with a committee of the Engineers' Society in regard to the water supply of Pittsburg, to report on the possibilities of purifying water, etc. There was a paper containing analyses of water read at the Chamber of Commerce by Mr. Stafford. At the request of Mr. Reuben Miller, who is also a member of our society, it was referred to this committee. Mr. Reuben Miller, Joseph Able, and myself, were appointed a committee by the Chamber, and we were requested to confer with this society. I would like to know whether the Engineers' Society will see fit to apppoint a committee to co-operate with the Chamber of Commerce committee, so that I can make some report at the next meeting of the Chamber.

The Chairman: Do you wish this meeting to appoint a committee to confer with the Chamber of Commerce committee?

Mr. T. P. Roberts: I think this would be the proper section of the society to appoint such a committee. I would merely state that the idea would be, I should think, to group together all the information we can get on the subject. It is a matter of very great importance to the public, and I think a committee which would take up this whole subject in connection with the Cham-

ber of Commerce committee, and have the results of their work properly published, would be an advantage not only to our society but to the community at large.

PROF. F. C. PHILLIPS: I do not doubt but that there are members of our society who could aid Mr. Roberts in this matter, and as he is a member of the Chamber of Commerce committee, and asks that we co-operate with them, I think it is eminently proper that we should show our respect in the matter, and I therefore move that such a committee as Mr. Roberts suggests be appointed.

MR. STAHL: I second the motion.

The Chair appointed as the committee, Messrs. Phillips, Clark, Kemery, Hopké, and Handy.

Adjourned.

JAMES O. HANDY,
Secretary.

MARCH 21ST, 1893.

The regular meeting of the Society was held in the lecture room of the Academy of Science and Art, on March 21, 1893.

Mr. M. J. Becker, President, in the chair, Mr. R. N. Clark, Secretary; 52 members were present. The minutes of the last meeting were read and approved. The names of eleven applicants for membership were read. The President having appointed Messrs. T. H. Johnson and E. Swensson as tellers, the following applicants were elected to membership by ballot, Prof. John W. Langley having been elected by acclamation:

Honorary member, Prof. John W. Langley; members, Charles M. Bartberger, William Bradford, John M. Bruce, William J. East, Rawdon Evans, Charles Hart, Mary Lynne, H. B. Miller, Charles B. Murray, Thomas McD. Donald, Warren P. Smiley, Eli Webb.

The motion of Mr. William G. Wilkins that a social meeting of the Society be held on the evening of the first Saturday of each month, was taken up. After discussion, Mr. Wilkins amended his motion as follows: "That the Secretary be instructed to add

to his regular notices the announcement that on the evening of the first Saturday of the month a social meeting will be held at the rooms of the Society." The motion as amended was then adopted.

Mr. Gustave Kaufman moved that a committee be appointed by the Chair to draft a suitable memorial to the late Dr. Hugo Blanck, member of the Society, which was carried, the committee appointed being Mr. Walter E. Koch and Gustave Kauffman.

Upon the motion of Mr. T. P. Roberts, "That a committee of five engineer members be appointed by the President to serve on the joint committee appointed by the Chamber of Commerce and the Chemical Section of this Society, and that the engineer members be authorized in co-operation with their confreres, to act in conjunction with the Women's Health Protective Association, the medical societies of this city, and the Microscopical Society, in the matter of investigating the water supply of Pittsburg and other places in Western Pennsylvania, and that said joint committee have full power to act in the matter of its organization and conduct. It being only reserved that in the absence of any definite programme or estimate of cost of printing its report or other proper expense, the engineers and chemists of this Society or said joint committee, are authorized to incur expenses only upon approval of this body."

The President appointed the following: Charles Davis, chairman, Alexander Dempster, G. Kaufman, G. S. Davison, and J. H. Harlow.

The following paper was then read:

A NOTE ON PIN-PLATES.

BY THOMAS H. JOHNSON.

During the past two years, in the course of inspection of new bridges built for the lines with which the writer is connected, nine full size top chord sections have been tested to destruction. Of this number, seven failed at the ends, without developing the full strength as a column, due to their length and sectional dimensions.

All these were of the ordinary form of top chord section known as the inverted **U** or trough section. They were built of plates

-FIG. 1-

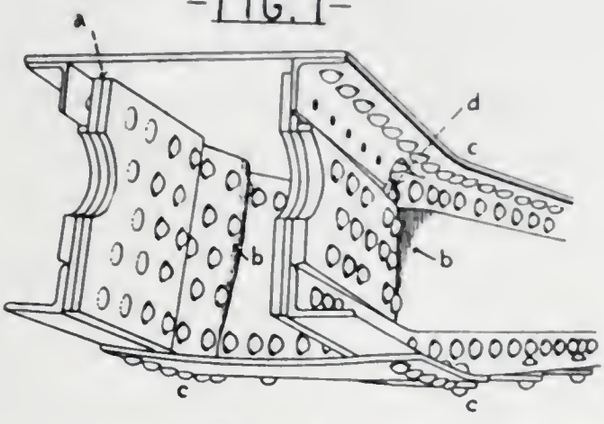

-FIG. 2-

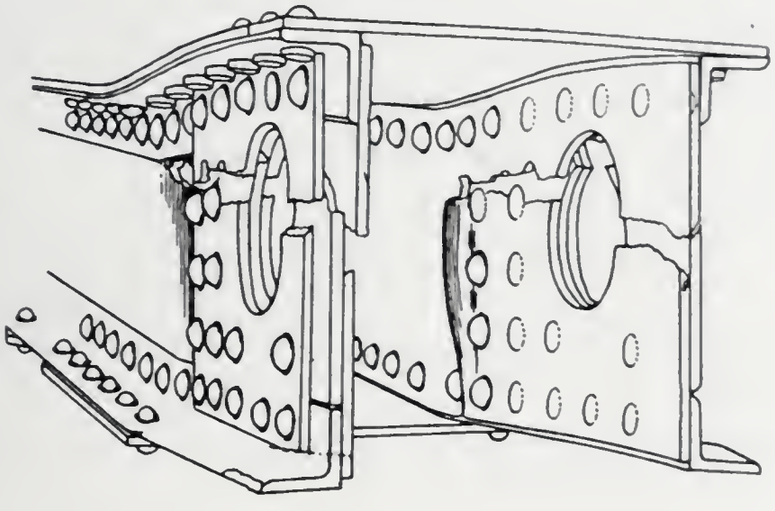

-FIG. 3-

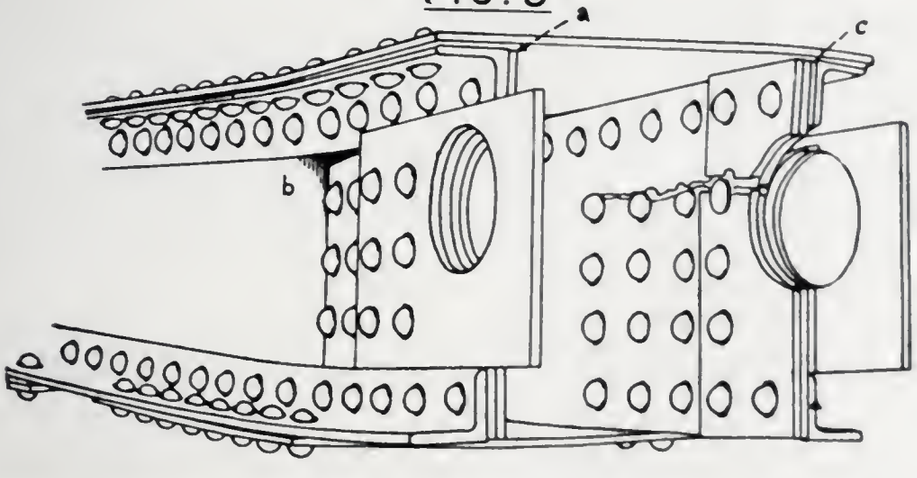

and angles, and were tested with pin-ends, the bearings being reinforced with pin-plates in the usual manner. They were designed

and built by four well-known and reputable bridge building companies, and were in accord with the recognized practice of the day in the matter of pin-bearings and the number of rivets by which the reinforcing plates are secured. This practice is to add to the webs a sufficient number of plates to make the area of the bearing surface on the pins sufficient to meet the requirements of the strain sheet and the specification. The total load to be sustained is then apportioned to the webs and the several reinforcing plates in proportion to their respective thicknesses, and care is taken to provide each plate with a sufficient number of rivets to transmit its share of the load to the web or to the next adjoining plate; and an intervening plate must have rivets enough to transmit such added load in addition to its own share.

Of the seven tests which failed at the ends, five failed by shearing the top flange rivets and buckling the web plates immediately in front of the longest pin-plate, accompanied by more or less distortion, and even rupture of the flange angles. It has not been thought necessary to reproduce in detail all of these tests, but a typical one has been selected for illustration, and is shown in Fig. 1. It has been drawn from a photograph of one of the fractured ends and is fairly representative of all the failures in this group.

The column here shown was composed of

		Square inches.
1 cover plate 20 inches x $\frac{3}{8}$ inch	=	7.5
2 top flange angles 3 inches x 3 inches x 7.0 pounds	=	4.2
2 web plates 14 inches x $\frac{3}{8}$ inch	=	10.5
2 bottom flange angles 4 inches x 3 inches x 9.7 pounds	=	5.8
Total area (calculated), ...		28.0

Same by actual weight of the several members, 27.95 square inches.

The area of the top flange (cover plate and angles) is $41\frac{3}{4}$ per cent. of the total area; of the two webs $37\frac{1}{2}$ per cent., and of the bottom angles $20\frac{3}{4}$ per cent., and the total load sustained by the

column should be distributed to the several parts in these proportions.

Each web was reinforced at the pin bearing by one inside plate 14 inches x $\frac{3}{4}$ inch x 1 foot $1\frac{11}{16}$ inches, and one outside plate 8 inches x $\frac{3}{4}$ inch x 1 foot $9\frac{3}{16}$ inches. The inside plate had four rivets engaging the top angle, four in the bottom angle, and nine in the web between the angles. The outside plate had fifteen rivets in the web and none in the angles.

The diameter of the pin was $4\frac{7}{8}$ inches.

The length of column between centres of pins was 18 feet $7\frac{3}{8}$ inches, and the radius of gyration of the section 5.69 inches.

The calculated ultimate resistances were as follows:

	Pounds.
Ultimate strength as a column, ...	1,001,700
Ultimate resistance of the bearing surface, . .	1,096,900
Of which the pin-plates furnish, ...	877,500
Ultimate shearing resistance of rivets in plates, .	988,400

The ultimate strength shown by the test was 816,400 pounds, or $81\frac{1}{2}$ per cent. of the calculated strength.

It failed by shearing six top flange rivets on each side, the webs and attached plates being pushed forward about $3\frac{1}{4}$ inches at the top (see *a*, Fig. 1), and the webs buckling immediately in front of the pin-plates (*b b*, Fig. 1). These movements caused both flanges to bend upward at *c c*, the top flange angle in this case being torn as well as bent, as shown at *d*.

Let us now consider the stress conditions prevailing at the instant of failure.

The load applied was, as stated, 816,400 pounds; a normal distribution of this load over the whole section would assign to the

	Per cent.	Pounds.
Top flange, ...	$41\frac{3}{4}$	341,000
Webs, ...	$37\frac{1}{2}$	305,900
Bottom flange, ...	$20\frac{3}{4}$	169,500

For direct transmission from the pin to the top flange there are the two inside pin-plates with four flange rivets to each plate,

eight rivets in all, having an ultimate resistance to shearing of 123,700 pounds.

The outside pin-plate extends beyond the inner one, and so far stiffens up the web that it cannot buckle except beyond the sixth rivet; hence the six rivets on each side, twelve in all, must stand or fail together, so that in addition to the 123,700 pounds transmitted direct from the pin-plate to the flange angles, there will be an additional amount of 61,800 pounds transmitted from the pin-plates to the web and thence to the flange angles, making in all 185,500 pounds carried to the top flange instead of the 341,000 pounds which should be so transferred. The difference, 155,500 pounds must remain in the web to be transmitted to the flange angles through other rivets beyond the pin-plates, provided the web is able to take care of it in addition to its own share of the load. Between the sixth and seventh rivets, therefore, the webs will have to carry,

	Pounds.
Their own share, ...	305,900
Balance of top flange share, ...	155,500
Total, ...	461,400

But the ultimate strength in compression of a $\frac{3}{8}$-inch plate 3 inches long, square ends, is 38,900 pounds per square inch, or in this case, for 10.5 square inches, 408,450 pounds.

It will therefore be seen that plates and rivets were both strained to the full limit of their endurance, and both gave way at the same instant, causing failure in this detail, at a less load than the column, as a whole, would have sustained. At the other end of this column the behavior was similar, though less strongly marked, but between these points the column remained intact, without any signs of crippling.

The other four specimens which failed in the same manner possessed the same characteristics as the one described. They differed from it and from each other in the number and arrangement of the plates, but they all show, on investigation, the same insufficiency of the top flange rivets, and consequent overloading of the web in front of the pin-plates.

The lesson to be drawn from this group of tests is that the pin-plates should in all cases engage enough flange rivets to transmit to the flanges their full proportion of the load direct from the pin.

Fig. 2 shows a failure of a wholly different character.

The data in this case is as follows:

		Sq. in.	Per ct.
Cover plate, . .	17 in. by $\frac{3}{8}$ in.	= 6.37	= 43.7
2 top angles, . .	$2\frac{1}{2}$ in. by $2\frac{1}{2}$ in. — 6 lbs.	= 3.60	
2 web plates, . .	12 in. by $\frac{3}{8}$ in.	= 9.00	= 39.5
2 bottom angles, .	3 in. by $2\frac{1}{2}$ in. by 6.4 lbs.	= 3.84	= 16.8
	Total area,	22.81	

	Pounds.
Ultimate strength by calculation, ...	896,100
" " " test, ...	591,500

or 66 per cent. of the calculated strength.

Proportion of load to the several parts:

	Per cent.	Pounds.
Top flange, ...	43.7	258,600
Web, ...	39.5	233,400
Bottom flange, ...	16.8	99,500

In this case also there were two pin-plates to each web, but they were both on the outside, the first one fitting between the flange angles and engaging eight rivets in the web; the other extending over this and engaging five rivets in each flange, besides the eight rivets in web already mentioned. By this arrangement the vertical leg of the flange angle was held between the web-plate on the inside and the pin-plate on the outside, thus putting the flange rivets in double shear. These five rivets on each side, ten in all, therefore present twenty shearing sections, with an ultimate resistance of 309,200 pounds, while the amount to be transmitted, as stated above, is 258,600 pounds to the top flange, and only 99,500 pounds to the bottom flange.

This column therefore could not fail like the preceding, but it

also failed under a load much below the calculated strength, and by its mode of failure points out another form of weakness. As shown in the sketch, Fig. 2, all of the side-plates were torn asunder.

Just why they should have behaved in this manner is not clearly apparent, but failure of this character was no doubt facilitated by the fact that in making up the shop bills for the materials, all the pin-plates were billed with their length in the horizontal direction and their width vertically, thus placing both pin-plates and web-plates with their fibres parallel and horizontal. If the pin-plates had been made with their fibres vertical and at right angles to those of the webs, the combination would certainly have offered greater resistance to splitting in this manner.

In Fig. 3 we have a case in which both the preceding modes of failure occur in the same column, one side failing by shearing the top flange rivets, and the other side by splitting the plates.

I will not burden you with the figures in detail for this case, but will state in brief that while the top flange rivets were inadequate, the combined resistances of top flange rivets and web-plates were about equal to the joint shares of the load belonging to these members.

In this case also the pin-plates and webs had their fibres parallel and horizontal. If the pin-plates had been made with fibres vertical, both sides would have failed by the first method, but without any material change in the ultimate load, for the top rivets, on the side which split, were on the point of shearing, as shown by the movement of the plates at *c*.

While studying this phenomenon as manifested by Fig. 2, it occurred to the writer that it was possibly due to an elongation of the vertical diameter of the pin, consequent upon the shortening of the horizontal diameter under pressure, thus exerting a bursting pressure against the top and bottom of the pin-hole. But, with Fig. 3 before us, that theory is untenable, for you will observe that the plates which split have only half-holes for the pin, and offer no resistance to the enlargement of the pin in that direction, while the outer plate which had a full hole did not split at all.

It may be suggested, as a probable explanation of this phenomenon, that the distribution of the load from the pin to the flange-rivets must be on diagonal lines, and each pair of such diagonals must develop opposing vertical components, producing vertical tension in the webs. I will not attempt in this paper to give you a formula for computing this tension, but will only say, that in addition to changing the direction of the fibres in the pin-plates, the situation will be improved by giving them more length, thus securing flatter angles for the lines of transmission, with correspondingly reduced vertical components.

Experience in the shape of eye-bar heads shows that the best results are obtained when the form of the head is such that the lines of transmission from the sides of the head to the body of the bar are at an angle of about 30° with the axis of the bar. If this angle also holds good with compression strains (and there is no apparent reason why it should not), then the length of plates transmitting strains to the top flange should be such that the mean line of transmission will be at an angle of 30°. This would require that the horizontal distance from the pin-centre to the farthest rivet in the pin-plate shall be four times the vertical distance between pin-centre and pitch-line. This suggestion is offered provisionally, and in the absence of a sufficient number of experiments to determine a definite law.

When flange-rivets are in single shear, a compliance with our first rule as to the number of rivets will generally lead to pin-plates of greater length than the provisional rule just stated; but when rivets are in double shear it may lead to shorter plates and expose the column to form of weakness shown in Fig. 2.

It is proper to add, by way of explanation, that all the test-pieces were designed for end-panels of bridges of moderate span, and in all cases the requirements of the specifications as to minimum thickness gave larger sectional areas than called for by the strain-sheets; so that while the test-loads were below the theoretical strength of the column, they were, in all cases, not far from five times the amount called for on the strain-sheet; some a little more and some a little less; and the bridges represented in the tests were considered acceptable, notwithstanding the relative weakness of the detail.

Discussion.

Mr. Becker: Mr. Lewis, what is your idea of the causes of the tearing of the chords in the reinforcing plates?

Mr. H. J. Lewis: Mr. Johnson has discussed the causes of failure in the cases shown so thoroughly that I have nothing new to offer on that score. However, as I was present while several of these experiments were made, and the author has told me the results of his theoretical investigation in advance, I have tried to devise a simple means of strengthening the weak points developed by the experiments. In ordinary truss bridges the hip-joint and foot of the end-post are the only points at which this trouble is likely to occur, as, in the intermediate joints of the upper chord, the greater part of the strain is transferred through the abutting ends. I would suggest, therefore, that at the first-mentioned points, an inside pin-plate, the full depth of the web, should always be used, and that the thickness of this pin-plate, plus the thickness of the web, should be such that the bearing value of a rivet in the two would be equal to or greater than the value of the same rivet in double shear. I would also introduce an additional angle on the inside of the chord on each side, beginning far enough away from the pin to clear the eye-bar head, and thus connecting the web and pin-plate to the cover-plate by an additional line of rivets. This would, I think, keep the pin-plates within a reasonable length, and, at the same time, make thorough provision for the transfer of the proper proportion of the strain from the pin to the cover-plate.

Mr. J. Deforth: I think that the failure of these sections can be charged, not only to insufficient reinforcement of pinholes, but also to the eccentricity of the applied pressure in regard to both flanges.

The compressive stresses imparted to top and bottom flanges through the pin-plates are, at least, approximately inversely proportioned to their distances from the pin-centre, *i.e.*, distances of rivets through vertical angle-legs from pin-centre. The corresponding unit-flange strains are therefore in the vicinity of the pinhole, not really the strains due to the *areas* of flanges, but will be found greater in top than in bottom angles. A failure of the sec-

tion near the applied pin-pressure will result in a crippling, shearing or buckling up of the vertical legs of the top flange in consequence of the excessive unit-flange strains.

By avoiding the eccentricity and designing the sections in such a manner that pin-centres and centres of gravity (not centres of moments inertia) will coincide nearly with web-centres and by making the webs heavier and deeper, thereby reducing the amount of pin-bearing and the flange-stresses, a more satisfactory section against crushing could be obtained than those in favor. The webs in most top chords are too thin, and the advantage from the packing of pin-plates is not sufficient to prevent the webs from buckling at the end of those plates.

Mr. Johnson: I would say in reply that Mr. Deforth is entirely right when he says that the webs were too light and unable to stand the strain put upon them. That is the very point I wished to make in my paper—to show that these reinforcing plates had not been carried far enough to strengthen the webs properly; that really the web-plates should not be permitted to take any more than their own share of the entire load. We should accomplish this by making the pin-plates longer and connecting them directly with the flanges, thus making direct transmission from the pin to the flanges.

Mr. Becker: I did not follow Mr. Johnson in his figures regarding the theoretical strength of these columns; in other words, what would they stand ordinarily, provided they would resist in the usual manner and yield by flexure in the middle of the column, as compared with the figures at which they did fail in the test?

Mr. Johnson: In the case of Fig. 1 the test result was 81 per cent. of the theoretical strength, and in Fig. 2, 66 per cent.

Mr. Becker: Sixty-six per cent. is very low, approaching somewhat alarming results.

Mr. Swensson: There is one important point in connection with the reinforcement of chord-sections at pins, as shown in Fig. 1, that Mr. Johnson might have brought out somewhat stronger, as it seems to be largely responsible for the manner in which these

sections failed. Mr. Deforth alluded to it in his remarks. I mean the eccentricity of the section and the trouble it causes in the proper designing of pin-joints.

When making the details of the chord in a truss-bridge the first thing to do is to locate the pin-centre line. It is either located in the centre of gravity or centre of moments of the section; in either case it will be eccentric whenever the section has cover-plate and is economically designed. After the diameter of pins has been decided upon, the next step is to determine the size of pin-plates for reinforcement of pin-bearings, and we are at once confronted with the difficulty of distributing the material in these plates around the pin-centre line in the same proportion as the areas of flanges in the original section. This is especially troublesome in shallow chords, as in chords of larger spans we have more room for the plates. In other words, the centre of gravity or centre of moments for the reinforced section should be the same as for the original section. But, instead, the centre-line of the reinforced section will be considerably lower down, because it is impossible to get room for the plates under the eccentric conditions. The greatest part of the plates will be below the original centre-line, and so will the rivets, when they, in fact, should be above the line to transmit the greater percentage of strain.

Thus, if the centre of gravity or moments is also the geometrical centre of section, we will have an equal amount of the strain to transmit above and below this line, and the pin-plates can also be symmetrically distributed, and an upward failure will be impossible, as in Fig. 1.

This, of course, means a section with same area in both flanges, which can only be approached on account of economy—the nearer, the more money you can afford to spend. After the strains have been properly distributed to the pin-plates, we must, of course, arrange to transmit the strains to the flanges without the help of the web. Thus, I heartily agree with Mr. Johnson in regard to the necessity of having the pin-plates engage the flange-rivets, and far enough out to transmit all the strain in the flanges, without having part of the strain go through the web first.

The inside pin-plates should be longer than the outside, so as

to protect the web against buckling, the flange-angles performing this duty on the outside.

MR. BECKER: Mr. Kaufman, did you make any tests of this sort when you were building the Covington Bridge?

MR. KAUFMAN: The bridge manufacturing company thought it would cost entirely too much money, and I think this is the trouble with most of these things. They are afraid to put too much money into pin-plates. If they would make them twice as long and sufficiently thick, I think the difficulty would be obviated.

MR. SWENSSON: The calculations of the pin-plates, as well as other parts of a bridge, are usually made from specifications furnished by the customer.

MR. BECKER: I understand that all these sections are top-chord sections. There were no tests made of members for the inclined end posts.

MR. DEFORTH: Did you test any channel-sections composed of two channels and one plate?

MR. JOHNSON: We tested only one of that kind. It failed by buckling between lattice bars, near the middle of the length.

MR. DEFORTH: The reason that this section failed in the middle, and not as the sections composed of plates and angles, is probably due to the smaller amount of stress which the top flange had to transmit through the rivets into the cover-plate.

MR. JOHNSON: That is right. If the sides are made of channels, then we would have to transmit only the stress to the cover-plates, and not the stress to the angles.

MR. BECKER: I would ask Mr. Swensson what compromise he would suggest in order to make the reinforced ends of equal strength with the body of the section. As I understand it, the point he makes is, that by placing the pin-holes eccentrically, we provide, in a theoretical way, surplus strength in that portion of the column, which is presumably strong enough, and transfer the weak part of the column to the ends, which the tests have shown to be the points of failure, notwithstanding our attempts at reinforcements by means of pin-plates.

MR. SWENSSON: It is not a question of making the ends of equal

strength with the section as that is presumably always done, nor do I claim that by reinforcing an already strong enough portion of the column, the weak part of the column is transferred to the end by reason of the pin-centre line being eccentric. What I claim is that the eccentricity prevents the correct proportionate distribution of pin-plates around the pin-centre line. Therefore in designing the section of a top chord we should aim at the ideal section, having the centre of gravity and centre of moments and the geometrical centre all in the same line. This means, of course, to have the same section in top and bottom flange, the top including the cover-plate. In other words the bottom flange is too light as usually designed.

If we have a symmetrical section, we will also have symmetrical pin-plates, and if they are long enough to transmit the total flange strains by way of easy curves, the column will certainly fail in the middle as in chords of rolled channels without cover-plates and not at the ends as in Fig. 1. In reinforcing eccentric sections we may have enough pin-plates for the total strain, but not properly distributed, having too much material and rivets below and too little above centre line of pins, which seems to be the trouble with the sections of chords tested. If we are obliged to use eccentric sections, we should also have the pin-plates eccentric the same way as the section and not in the opposite direction as is usually the case.

Mr. Deforth: My suggestion would be to make the web-plates pretty heavy, even if such a proportioning should require more metal than the sections calculated in the usual way. By doing this the number of rivets and size of reinforcing plates and shop-work will be reduced and the structure need hardly cost more than bridges with the customary chord-sections.

Mr. Becker: That would make a difference to the party who will have to pay for it by the pound.

Mr. Lewis: The present form of eccentric top-chord section is a direct outcome of the system of competitive plans in which each designer seeks to secure the maximum radius of gyration without violating the provision relating to minimum thickness. As long as we continue to design with a view to economy under present

specifications the eccentric chord is liable to be used, and I see no reason why it should be either abandoned or modified when the remedy for its defects is apparently so near at hand.

Mr. W. G. Wilkins and Mr. G. Kaufman read papers "On Foundations." It was moved, the hour being late, that discussions on these papers be deferred to the April meeting and that the papers should also be deferred for April's publication.

Adjourned.

R. N. Clark,
Secretary.

March 28th, 1893.

Meeting of the Chemical Section of Engineers' Society of Western Pennsylvania.

Minutes.

Mr. Joseph H. Eastwick, Chairman; Mr. James O. Handy, Secretary; sixty-seven persons were present. On account of the general interest in the subject of water-supply, the meeting was attended by engineers, physicians and other citizens. The Secretary read a communication on "Segregation in Steel."

Mr. James H. Harlow read a paper on the "Water-Supply of the Allegheny River Towns." He gave facts regarding sewage contamination present and prospective, by towns above Pittsburg.

Mr. James O. Handy gave the results of analyses of the waters of Pittsburg and vicinity.

Remarks on the subject of water-supply were made by Prof. F. C. Phillips, Dr. F. Le Moyne, Mr. A. F. McKenna, Mr. Reuben Miller, Dr. Thomas, Mayor William M. Kennedy, of Allegheny, Mr. T. P. Roberts, Dr. Duff, Dr. Watson, Dr. Daly, Mr. F. L. Aschman, Mr. Joseph Abel, Mr. Alexander Dempster.

NOTE ON SEGREGATION IN STEEL.

BY F. H. WILLIAMS, WHEELING, W. VA.

A few years ago I came across a broken ingot of soft Bessemer steel which had been fractured squarely across at about *two* feet

from the bottom. The whole length of the ingot was about *five* feet. With a diamond-shaped chisel I took *five* samples from the fractured surface.

Sample No. 1.—Close to outer surface of ingot, and midway between two angles.

Sample No. 2.—Two inches from outside and in a line from No. 1 to centre.

Sample No. 3.—Three and one-half inches from outside.

Sample No. 4.—Five inches from outside.

Sample No. 5.—Seven and one-quarter inches from outside at centre of ingot.

No. 1 contained 0.086 per cent. phosphorus.

No. 2 contained 0.081 per cent. phosphorus.

No. 3 contained 0.187 per cent. phosphorus.

No. 4 contained 0.166 per cent. phosphorus.

No. 5 contained 0.146 per cent. phosphorus.

The products rolled from a steel ingot will necessarily show irregular distribution of the elements which segregate. For example, I have found in a piece of *nail plate*, which is a portion of an ingot greatly reduced in thickness and greatly elongated, .092 per cent. and .091 per cent. phosphorus near the opposite *edges* of the plate, and .150 per cent. in the *centre;* and in a steel rail selected at random:

	Per cent. phosphorus.
At the top of rail,	0.120
In head of rail, *one* inch from top,	0.112
In the web, two inches from top,	0.127
In the centre of flange,	0.113

These results were checked by duplicate determination.

NOTE BY THE SECRETARY: Mr. T. W. Hogg read an article on "Segregation in Steel Ingots," before the Society of Chemical Industry, March 9, 1893.

NOTE BY JAMES O. HANDY: An ingot of soft steel contained at surface, about half-way up, 25 per cent. more phosphorus and sulphur than was found two inches deeper in the same hole.

THE WATER-SUPPLY OF PITTSBURG AND ALLEGHENY CITY.

BY JAMES H. HARLOW.

SOMETIME since we became interested in the question as to the condition of the rivers in our vicinity as a source of water-supply; and while the information we have been able to gather is not altogether conclusive, still it may be of interest in the question of supplying Pittsburg and Allegheny from the Allegheny river.

The Allegheny river rises in the northern central part of Pennsylvania, and passes northerly into the State of New York, thence westerly and southerly to Pittsburg, a total distance of about 325 miles.

The general characteristics of the territory through which the Allegheny river passes is hilly, and sometimes mountainous. The tributaries of the Allegheny on its easterly watershed are in a rugged and precipitous territory. The water from all of these tributaries passes quickly into the Allegheny. The valleys, as a rule, are deep and narrow.

From Oil City to the mouth of the river, the river is navigable for perhaps one-half of the year. Between Oil City and the Kiskiminetas, the general slope of the river is 2.3 feet per mile. Above Oil City, it is about 3.4 feet per mile.

Of the 325 miles length of the river, 75 miles, or about one-fourth are in the State of New York.

The Allegheny river above its mouth drains an area of about 11,100 square miles; the drainage area above the Pittsburg Water Works intake is about 10,900 square miles.

The total population, as per the census of 1890 of the Allegheny basin, above Pittsburg is about 621,493, or 57 per square mile.

Within the drainage area of the Allegheny river, there are 51 towns having a public water-supply. Among the largest of these we have in the State of New York: Jamestown, population, 16,038; Olean, 7358; Salamanca, 3692; Fredonia, 3399; and six

others aggregating 6502, making a total population supplied by public water-supply in the State of New York, 36,899.

In the State of Pennsylvania we have: Johnstown, population, 26,000; Oil City, 10,932; Bradford, 10,514; Meadville, 9520; Titusville, 8073; Kensington (estimated), 8000; Franklin, 6221; Dubois, 6149; Corry, 5677; Tarentum, 4627; Warren, 4332; Indiana, 3597; Latrobe, 3589; Blairsville, 3126; Kittaning, 3095; and 26 others, aggregating 41,000, making a total of 154,-453, which are supplied with water from public works in the State of Pennsylvania, making a total in the two states of 191,352 of the population furnished with water by public works. In other words, we have about 30 per cent. of the population thus furnished within the drainage area of the Allegheny river.

The low-water discharge of the Allegheny river according to U. S. Census Report for 1880, near the mouth of the river, is about 1300 cubic feet per second. The velocity we were not able to obtain exactly; but from the best information we could obtain from boatmen who had floated rafts and freight on the Allegheny river, it is about four miles an hour.

Most of the towns mentioned, have sewerage systems in a more or less complete form.

Meadville has just let a contract for a complete sewerage system.

Corry let such a contract about about one and a half years ago.

Jamestown has within a month let a contract for the building of about 7 miles of main sewers with the expectation of putting in 25 miles laterals next year.

Olean put in a system of main sewers in 1892, and this year is making the lateral extensions.

Tarentum is designing a system.

The question of sewerage is one which seems to be of general interest throughout the country, and is likely to be greatly extended during the next few years, and the least expensive method of sewage disposal is into the nearest running stream; which in these cases is the Allegheny river.

The estimated sewage discharge from the systems now in operation or in the course of construction in this basin will, within a

short time, amount to about 10 cubic feet per second, or $\frac{1}{130}$ of the low-water discharge of the Allegheny river, and, in our judgment, in the next ten or fifteen years, the most, if not all, of the 51 towns mentioned will have systems of sewerage, and will, without allowing for the increase in the population, discharge not less than 25 cubic feet of sewage into the river per second, or $\frac{1}{50}$ of the low-water supply.

We have endeavored to obtain from Prof. Phillips and others some analysis of the Allegheny river water for some years past, but we find that there has been no systematic examination. The best we have been able to gather is as follows (see page 112):

We feel backward in defining the meaning of these terms. But we may say that we understand the free ammonia to be the product of organic matter already decayed, and, in itself harmless, and of use only as indicating past pollution; the albuminoids we understand to be matter in process of decay, and the source of a possible disease. With the limited number of samples analyzed we have, for convenience, combined the ammonias under the head of "Sum of Ammonias." From this column we base our opinion as to the condition of the Allegheny river water. If we examine the table we find that the sample analyzed in 1886 is .006 as the sum of ammonias. At this time the water at Freeport was 1.5 feet. Freeport, Pa., is the nearest point on the Allegheny river above Pittsburg where the U. S. Signal Service has daily records of the height of water. In May of 1887 other analyses were made, the average of which was .025; at this time there was 5.2 feet at Freeport, or about three times the stage of water when the 1886 analysis was made. If a uniform amount of sewage was being discharged into the river the ammonias in the water at this time should be about one-third that of 1886, but instead of this it is four times as much. Considerable allowance must be made as to what relation the depth of water in the river is to a previous condition of the river. The depth of water given for May is the average of the month. During the early part of May there was nearly 12 feet of water; the latter part it was 2 or 3 feet of water. If the analysis was made during the floods it is possible that some of these am-

— ALLEGHENY RIVER WATER —
— PITTSBURG PA. —

DATE	AUTHORITY	Height of Water at Freeport Pa.	Total Solids.	Loss on Ignition	Chlorine	Free Ammonia	Albuminoid Ammonia	Sum of Ammonias	REMARKS
Aug. 6. 1886	Hunt & Clapp	1.5	8.73		1.20	0.0020	0.0040	0.0060	From Faucet - 96 - 4th Ave.
MAY 1887	Prof. Phillips	5.2	8.20	1.5		0.0080	0.0170	0.0250	Average 16 Trials - Allegheny.
DEC. 16. 1887	Hunt & Clapp	3.5	8.60		0.78	0.0174	0.0170	0.0344	Faucet - 95 - 5th Ave.
JUNE 12 1889	Pgh. Bd. of Health	7.5	10.92	5.52	1.40	0.0100	0.0300	0.0400	" Pittsburg -
FEB. 28. 1891	Hunt & Clapp	9.8	5.92			0.0038	0.0090	0.0128	" "
SEPT. 30. 1892	" "	1.9	9.90		1.45	0.0005	0.0152	0.0157	Hiland Ave. Residence
" " "	" "	1.9	10.30		1.36	0.0010	0.0164	0.0174	Ave'. 0162
OCT. 14 1892	Chb. of Commerce	0.9		0.45		0.0026	0.0130	0.0156	
JAN. 24 1893	"	3.1		0.37		0.0025	0.0080	0.0105	
FEB. 3 "	R. N. Clark	12.0	24.0	3.28	4.30	0.0070	0.0200	0.0270	Ave. 0262
FEB. 22 "	Prof. Phillips	7.5	10.9	2.80		0.0030	0.0380	0.0410	Allegheny.

Results are given in parts. per 100,000.

monias may be from collections on the banks during the previous month.

During December of this same year, with a 3.5 foot stage, the sum of ammonias was nearly 50 per cent. higher than in May, with a 5.2 foot stage. The ratio of ammonias in this case seems to be approximately proportional to the depths of water in the river, and with probably the same amount of sewage being discharged into the river. The next analysis is that of June 12th, which was analyzed for the Pittsburg Board of Health about two weeks after the Johnstown flood, with 7½ feet of water in the river. It is probable that considerable of the ammonias in this case were a result of that flood. The next five analyses of 1891 and 1892 seem to be fairly uniform, averaging about .0145.

During 1887 Pittsburgh had its highest death-rate from typhoid fever up to that time. Cincinnati also had its highest death-rate this year. The analysis of 1889 shows badly, and in diagram, which we shall refer to hereafter, it will be seen that the typhoid death-rate of Pittsburg, from about a month after the Johnstown flood until 1891, was in excess of that of any previous year. It is also noticeable that Cincinnati, in 1889, had a higher death-rate than usual; and still higher in 1890.

Analyzing these figures, we think the statement is borne out by the fact that the water of the river is deteriorating.

The claim is often made, especially in the public prints, that waters of a running stream purify themselves in a few miles, and this, to some extent, seems to be borne out from the fact that chemical analysis of waters below known sources of pollution have less of the ammonias than waters above such points. It is possible that, in a swift stream, some of the free ammonia is oxidized by being rapidly stirred when running over falls or being otherwise agitated. In quiet waters it is possible that the albuminoids may be deposited and taken up by vegetation. Dr. Frankland, of the Rivers' Pollution Committee, of England, says that there is no river of sufficient length in England to purify itself.* An-

* NOTE BY THE SECRETARY.—The very valuable work of Dr. Frankland was made many years ago, before any system of analyses of water was in use. Dr. Frankland's work is not now recognized as authority.

other fact must be borne in mind when analyzing the waters of our rivers; that is, the quantity flowing at the time the sample is taken. If the sample should be taken during a flood which had occurred after a long dry spell, the ammonia might be considerably higher than samples taken during a flood which followed at not a very long interval after the previous flood, the first flood having probably removed considerable deleterious matters that had settled or collected on the bank.

The New York State Board of Health, in its report for the year 1886, gives full information in regard to this.

The Massachusetts State Board of Health also says that during January and February, 1891, special examinations were made of the Merrimac river in connection with the epidemic of typhoid, and that, "at this time the river was covered with ice, and the quantity flowing was large, and the water was in a *good condition* from a *chemical standpoint.*" Bacterial examinations were made on five days at various points on the river, and the number of germs found ranged from 920 to 10,800 per cubic centimetre.

The State Board of Health of Massachusetts, in its report for 1889, says that, in the case of a stream used for drinking, *chemical purification is less important than the destruction of disease germs,* so that the purification should be considered from a bacterial as well as from its chemical standpoint.

The chemical analyses of the Allegheny river waters that have been obtained are few in number and cannot be considered except in a very general sense.

In order that such analyses should be of value, they should extend over considerable periods and samples be taken with uniformity, and refer to the physical condition of the river and time of the year. The facts relating to the Allegheny river water supply being so few, and subject to so many questions as to their value, we have tried to see what could be learned through other sources under similar conditions. To do this we have examined the Massachusetts State Board of Health Reports to some years back, and find that this State has been making systematic examinations of the various sources of water supply and of sewage disposal for the past seven years. One of the rivers of Massachusetts is the

Merrimac, which rises in Lake Winnepiseoge. Commencing at its mouth, the largest cities are Newburyport, Haverhill, Lawrence, Lowell, Nashua, Manchester and Concord. All of these cities dispose of their sewage into the river, but Lawrence and Lowell are the only two which take their water supply from the Merrimac river. Lawrence is situated about 9 miles below Lowell, and Lowell is situated about 14 miles below Nashua. In 1890 it was discovered that Lowell and Lawrence were having more deaths from typhoid fever than the city of Boston, with four times the population. The Board of Health immediately began to investigate the cause of this. The analysis of the water of the river was found to be as given below in parts per 100,000:

Summary of Analysis of Merrimac Water at Various Points, 1889.

	Total Solids.	Loss, on Ignition.	Chlorine.	Free Ammonia.	Albumin'd Ammonia.	Sum of Ammonias
Lake Winnepiseogee, N. H.....	1.89	0.54	.107	.0001	.0085	.0086
Above Nashua, N. H...	3.49	1.04	1.37	.0012	.0147	.0159
Above Lowell, Mass....	3.54	0.96	.152	.0018	.0148	.0166
Above Central Bridge, Lowell.....	3.74	1.03	.161	.0014	.0169	.0183
Above Lawrence.....	3.77	1.05	.178	.0025	.0175	.02
Below Lawrence.....	4.09	1.18	.222	.0014	.0196	.021
Above Haverhill.....	4.15	1.19	.227	.0029	.0198	.0227

The drainage-area of the river above Lowell is 4097 square miles, and the population was at an average of 56 per square mile, one less per square mile than we have.

By examination of the analysis of the Merrimac river waters, given above, it will be seen that there was almost a steady increase of impurities. The Massachusetts State Board of Health says: "The amonnt of impurities in the Merrimac river and its branches during the chemical examination for the past three years is estimated to be about 1 gallon in 600 gallons in the river

water passing Lawrence, and there has been no more impurity in the water, that could be detected by chemical analysis, than could be contained in one-half of the drinking-water supplies of the State obtained from ponds and streams; but the facts which have been presented showing that these two cities have so much higher death-rate from typhoid fever than other cities of the State, together with what is known of the relation of typhoid fever to sewage-polluted drinking-water, are strongest grounds for the conclusion that even with the small amount of organic impurity in the water, as shown by chemical analysis, the germs of this disease are able to pass, AND DO PASS, from one city to the other in the water of this river."

"These two cities, Lowell and Lawrence, both well situated and well regulated, have 50 per cent. more deaths by typhoid fever for the same population than any other cities in the State.

"During the investigation as to the cause of these deaths it was found that in the months of August, September and October of 1889 there were four cases of typhoid fever about three miles up the river from the intake of the Lowell Water Works, whose dejecta are known to have gone into Stoney creek a short distance above where it empties itself into the Merrimac river. Previous to this time the monthly death-rates from typhoid fever in Lowell had been 7. In September the deaths were 8; in October, 10; in November, 28; in December, 26; in January, 19, and in February, 14. The actual number of deaths was greater than in the city of Boston, and the average death-rate was six times as great.

"In Lawrence we find that in December, 1889, and January and February, 1890, following a month after the high death-rate of Lowell for that month, the death-rates of Lawrence from typhoid fever were higher than those of Lowell and eight times as high as those of Boston for the same months."

These typhoid fever germs, under proper conditions of temperature and other surroundings, will not only propagate with wonderful rapidity, but will be carried considerable distances. Experiments were made under the direction of the Massachusetts State Board of Health, as to how long the typhoid germs would survive at low temperature, and it was found that if water was

kept as near freezing-point as possible, that the germs greatly diminished, but that some of them survived as long as 24 days.

	Germs per c.c.
On the first day there were	6120
" fifth " "	3100
" tenth " "	490
" fifteenth " "	100
" twentieth "	17
" twenty-fifth "	0

We estimate more sewage will pass into the Allegheny river within the next year in proportion to the low-water flowage than in the Merrimac.

Returning to our Allegheny river, we find that Johnstown is 90 miles distant by river, and if we allow 4 miles per hour as the rate which the water flows, anything deposited in the river at Johnstown will reach us in about 22 hours. Oil City is about 113 miles, or 28 hours, distant. Meadville is 140 miles, or 35 hours, distant. Jamestown is 200 miles, or 50 hours, distant. Olean is 240 miles, or 60 hours, distant.

It can be easily seen, therefore, that there is plenty of time for the typhoid bacillus, which may be thrown into any of the sewers of these cities, to reach us under the most unfavorable conditions of temperature without difficulty.

If we compare the sum of ammonias of the Merrimac river water and the Allegheny river water, we shall find there is not much difference, and still the resulting disease from the Merrimac river has been so serious that special investigations have been continued for the past few years in relation to it, and both Lowell and Lawrence are spending thousands of dollars trying to get some other source of water-supply, and it seems to be reasonable that we must in the near future take up this question very seriously here.

We have tried by correspondence and otherwise to obtain information as to the number of deaths from typhoid fever occurring in the towns above us during the past few years, but have been unable to do so.

In this paper we have confined our attention to typhoid only, not because it was the only one which may be the result of impure drinking-water, but for convenience. Below we give a table of the monthly deaths in the city of Pittsburg from typhoid fever from 1873 to 1891 inclusive:

—TYPHOID DEATHS—

Months	1891	1890	1889	1888	1887	1886	1885	1884	1883	1882	1881	1880	1879	1878	1877	1876	1875	1874	1873
January	27	18	22	17	7	10	11	9	38	27	11	7	8	11	5	11	13	15	9
February	15	34	7	17	8	5	5	11	26	23	10	21	6	9	3	5	5	15	9
March	22	18	8	8	14	4	6	8	25	9	9	20	10	3		9	12	15	7
April	13	17	5	10	8	1	6	5	5	8	20	62	4	7	6	13	4	5	16
May	17	20	5	4	14	7	14	9	7	6	12	12	3	11	4	4	8	3	34
June	11	16	10	7	13	6	6	3	5	6	6	8	1	8	2	4	4	2	25
July	23	37	26	6	22	12	18	3	8	17	25	16	3	11	4		6	7	15
August	36	36	33	15	33	42	22	12	18	33	34	9	7	16	6	8	12	11	28
September	31	37	29	28	35	11	27	22	17	32	37	22	15	13	8	11	18	9	18
October	25	19	30	33	32	25	14	18	13	32	39	14	12	13	15	7	20	30	18
November	20	33	21	24	28	8	17	14	10	37	26	10	37	26	10	14	8	12	15
December	7	30	22	19	52	12	8	16	16	38	19	10	8	5	9	5	6	25	7
	248	315	218	191	269	140	154	130	188	268	248	211	91	115	71	84	120	149	191

POPULATION - U.S. CENSUS . 1880 . 156,389
" " " 1890 . 238,617

We find that the average deaths from this disease per month from 1880 to 1888, both inclusive, is 16.6. For convenience, we have plotted six of these years, viz., 1886 to 1891. We have taken 1886 because it has the lowest death-rate since 1880, and the probable social conditions are so greatly changed since 1880, that it has been thought wise to reject the years previous to the one named. In 1889 it will be noticed that the typhoid deaths up to June did not greatly vary from previous years, but since that time the number of deaths per month have been continuously high until December, 1891. In but four instances during this time have the monthly deaths fallen as low as the average during the previous nine years. For the design of the diagram we are indebted to the Massachusetts State Board of Health. In the diagram the circle represents the average death-rate for each month from 1880 to 1888; the radial lines represent the months of the year. Midway between these radial lines have been plotted the

deaths for that month, and the similar points of the adjacent lines have been connected with straight lines. The diagram does not

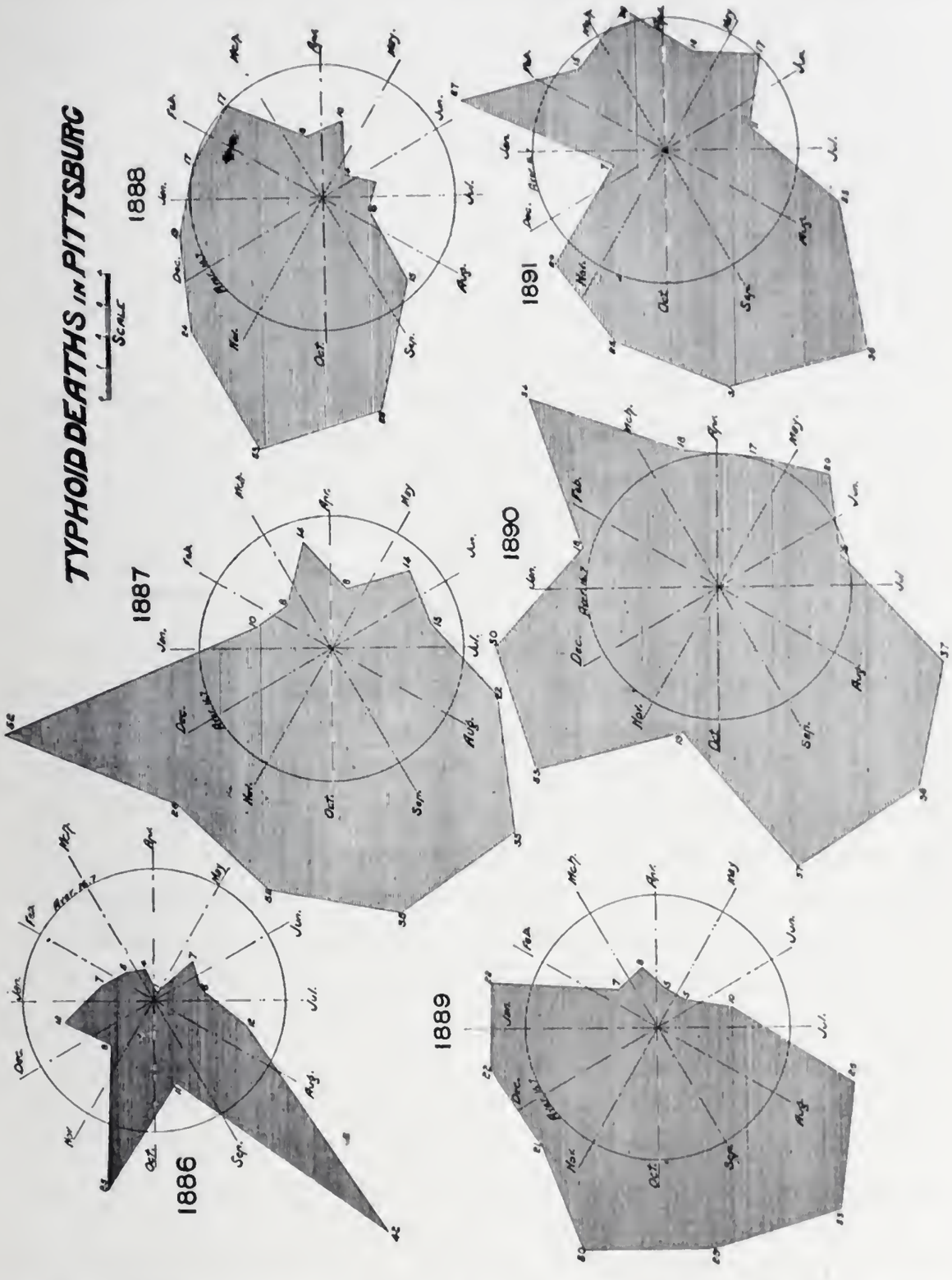

show quantitative numbers. From these tables and diagrams are we to conclude that the Johnstown flood of 1889, has for the last two and one-half years been having its effect upon the public

health? If we answer this question in the affirmative, the question then arises as to what shall be done to prevent its continuation, and we think there are three methods open to us.

1. We may compel towns above us to dispose of their sewage by some other method than that of allowing it to run into the river.

2. We may filter all the water used.

3. We may obtain our water supply from other sources.

In regard to the first we shall be met by objections as to cost, and the plea that we have got along very well in the past, and that they do not see that we shall be likely be much worse in the future.

With our own immediate friends it is impossible to place any value on a life saved, but looking at it from the political standpoint, each life may have a commercial value. Covering this point we could refer to a paper published by the Massachusetts State Board of Health some years ago, in which it is claimed that the value of a life is $1300.

From all the information we have been able to gather, there is no question that with proper sanitary conditions the larger number of deaths from zymotic diseases can be prevented. Typhoid, it must be remembered, is only one of these. We find that in 1891 the deaths from zymotic diseases in Pittsburg was 976. Assuming that the value of a life saved, as given in the report referred to, we find that this number of deaths represents an annual cash value to the State of $1,268,800; which, if capitalized at 5 per cent. would equal $25,376,000, and would represent a sum that the community could afford to spend, if by so doing these deaths could be prevented.

If we attempt to purify our water supply, and accept proposition No. 1, and compel all towns above us to dispose of their sewage in a manner to prevent contamination of the rivers, we shall have to have assistance from some central power beyond that of each individual municipality. The present method of sewage disposal is, however, in all probability the cheapest and most convenient. Assuming that the laws of this State are sufficient to compel the towns above us to adopt some means of sewer-

age disposal other than into the river, it must be remembered that it will apply only as far as the State lines; and that those towns and villages situated in the State of New York would not be legally bound to observe our laws. As has been shown previously, extensive sewerage systems are now being built within New York State, and sewage is being deposited in the river, and that bacteria entering at these points have sufficient vitality to reach us.

Pittsburg as a municipality may have no interest in the health of the towns below us, but it is no more unjust of the towns above us to put their sewage into the river than it is for us to do the same for towns below us.

If the second proposition is to be accepted, the cost will be more concentrated than in the first case. From the Massachusetts State Board of Health of 1890, we find that experiments show that from 96 to 99 per cent. of bacteria in the water can be removed by proper filtration. It has been shown in the same report that where the filtration proceeds at the rate of not greater than seven gallons per square foot per day, that at least 99 per cent. of the bacteria can be removed. The same report says of the more rapid filters the Board has not yet found one used either with or without alum, that removed all the bacteria.

It is said that the cholera that so disturbed this country last year was started by some Russian emigrants settling on the river Elbe above the water supply of Hamburg, and propagated itself among the inhabitants of Hamburg, and was thus distributed about. During the height of the epidemic in Hamburg there were 31.4 new cases, and 13.1 deaths per 1000 from the disease. At Altona, a few miles below, and which also takes its water supply from the Elbe, but which filters its water supply, there were about 4.5 new cases, and 2.2 deaths per 1000. That part of Hamburg where the streets were supplied with water from the Altona works, remained unaffected during the epidemic.

It is reported that the city of Pittsburg uses about 40,000,000 gallons per day. On this basis it would require a filter area of about 140 acres if constantly in use, but in practice we must allow from two to three times this area in order that the filters may be properly cleaned and taken care of. As a matter of interest, we

might say that in 1888, the Etna Water Company, and in 1890, the Bennett Water Company, built filters in the bed of the Allegheny river, from which they obtained their water supplies. We present here to-night samples of water taken from the Etna filter. One of these samples shows the water from the river immediately over the filter. The other sample is from water after having passed through the filter. The filters built in these places consist of crib-work sunk to the bottom of an excavation dredged in the bed of the Allegheny river and afterwards covered with three or four feet of gravel and sand, the surface of the filter, after completion, being below that of the natural bed. We have no biological examination of the filtered water at Etna, but in appearance it is very clear as compared with river water; and the floods that have occurred in the river since its construction are, so far as the water supply to the people is concerned, unknown. The present demand upon the Etna filter is at the rate of 150 gallons per square foot per day. This is more than twenty times the rate suggested by the experiments of the Massachusetts State Board of Health.

It has been suggested that of the 40,000,000 gallons of water used by the city of Pittsburg, a small part only is for domestic uses; and that this might be filtered and distributed by a duplicate set of mains. It has also been suggested that each individual user could, and should, filter and boil the water used for domestic purposes. This is a very good idea in theory, but we are of the opinion that, with very few exceptions, no private filter receives proper care to preserve its cleanliness, and boiling will continue only during the excitement. At one of our late meetings a paper was presented by our Secretary, Mr. Clark, in reference to water passing through a filter. This filter seems to be well adapted for the use to which it is put by Mr. Clark; but we very much doubt whether in the majority of cases it would not become foul from inattention.

The third suggestion to improve our water supply is to go to some other source, and this is a subject which can be settled only generally, and will have to be determined by careful examination of all the possible sources.

~ ANALYSES OF WATERS ~

Compiled by James O. Hardy.

Parts in 100.000

	Allegheny River: Pittsburg Supply March 6. 1893 - Pbg. Testing Lab.	Allegheny River: Pittsburg Supply Average of 1886, '87 '90 '91 '92 - P.T.L.	Allegheny River: Allegheny Supply Oct. Nov., Dec. 1881 - F.C. Phillips.	Allegheny River Allegheny Supply Oct. Nov. Dec. 1883. F.C. Phillips.	Thames River, London. Before Filtering. Wauklyn.	Thames River, London Filtered Wauklyn.	Elbe River, Hamburg. during Cholera Epidemic of 1892	Impure Well Water. Edgewood Pa. cause of Typhoid Fever. Pbg. T. Lab.	Greystone Spring Pittsburg Pa. Fifth & Hiland Aves. 1893. P.T.L.	Hugus Spring. Pittsburg Pa Penn & Negley Aves P.T.L.	Spring in West End Pittsburg Pa. Pbg. Testing Lab.	Well at Pbg. Hospital for Children Forbes & Craft Aves. Pbg. P.T.L.
Total Solids	7.6800	9.0900					116.0700		34.8000	18.6400	41.2000	20.4000
Free Ammonia	.0021	.0022			.0025	.0110	.1066	.0120	.0011	.0030	.0045	Trace
Albuminoid Ammonia	.0154	.0126	.0111	.0122	.0028	.0080	.0293	.0396	.0012	.0066	.0044	.0064
Chlorine	.5800	1.0300					47.20	1.8000	.9700	1.1600	1.1600	2.1300
Nitric Acid in Nitrates	.2100	.1630					2.79		.6400	.8900	3.4000	2.6300
Nitric Acid in Nitrites	Trace											

It seems to us that under some proper arrangement, so that each municipality should have its own rights properly guarded, a combination could be made under which the water might be brought from some distant source that is now pure, and could be protected in the future.

MR. J. O. HANDY: Some typical analyses are shown on page 123. The analyses of the Thames river are taken from *Water Supply, Chemical and Sanitary*, by W. R. Nichols. The Elbe river from *Chemical News*, Sept. 16, 1892. The Edgewood water came from a well of A. W. Cadman, on Washington avenue. The well was 33 feet deep; the water ran through it at a depth of about 4 feet only. The West End well is in the Thirty-Fifth ward, near the top of a hill; no houses above the spring.

The papers were very fully discussed by the members and visitors present. On motion, the meeting went into committee of the whole, Mr. A. Dempster, Chairman; Mr. J. O. Handy, Secretary. On motion, the chair appointed Dr. F. Le Moyne and Messrs. R. N. Clark, T. P. Roberts and G. S. Davison as a committee to consider the best means of organizing the whole committee into sub-committees for work, and to recommend members of the sub-committees.

Adjourned.

JAMES O. HANDY,
Secretary.

APRIL 18TH, 1893.

THE regular meeting of the Society was held in the lecture room of the Academy of Science and Art on April 18, 1893.

Mr. Thomas H. Johnson, Vice-President, in the chair. Thirty-seven members were present. The minutes of the last meeting were read, corrected, and approved.

Messrs. E. Swensson and G. S. Davison having been appointed tellers the following applicants were elected to membership:

Frank W. Ashmead, A. F. Brown, F. M. Bowman, Charles W. Friend, William D. Henry, William R. Michie, Thomas

Morrison, Samuel G. Stafford, Karl von Wagner, Eli Webb, C. G. Williams.

The papers of Messrs. W. G. Wilkins and G. Kanfman "On Foundations" were then discussed.

Mr. G. S. Davison read a paper "On the Water Supply of the Oliver Coke Works."

On motion of Mr. G. S. Davison the chair appointed the present Reception Committee to consider the advisability of adopting a color for the Society.

FOUNDATIONS.

BY W. G. WILKINS.

THE subject of foundations is one of great importance, both to the engineer and his client. On the proper designing and construction of the foundations depends not only the stability of the superstructure, be it bridge, building, or machine, but also the reputation of the engineer.

The engineer is frequently called upon to decide the question whether to go to great expense and thus secure absolute stability to his structure, or to build a cheaper piece of work and take some chances as the result.

There are cases in which the first is the proper method to pursue, and where the engineer owes it to his client and himself as well, to take no chances as to the result. While the first outlay to insure the work being safe and sure to do the work required of it, may be large, still it may be better to go to this outlay, rather than skimp the job and perhaps have to go to much greater expense in the end in tearing down and rebuilding.

Cases will arise where the client will refuse to go to the expense required to give a perfect and satisfactory piece of work, and will to save expense insist on cheap and inferior work. In cases such as this, where the engineer is sure the result will be a failure, the engineer owes it to himself and the profession to emphatically refuse to be a party to such work.

Just how far to go in the way of spending your client's money,

to ensure the stability of the work and your own reputation, and just where you can cut down expenses without injuring the same, is where an engineer has to exercise his best judgment, based not only on his own experience, but on that of his brother engineers.

There are many points that an engineer has to look out for in designing foundations. He must be sure in the first place of just what his foundation has to stand on and what it has to bear. Then by a proper use of his materials, and a correct proportioning of the structure he will be enabled to design a foundation that will do its work at a minimum cost.

There are many ways in which money may be saved in building foundations. Where a foundation is on dry land it will be found much cheaper to build the footings, or a large part of the work below the surface, of concrete made with Rosendale or Louisville cements, and if the work is near a blast-furnace a still further saving may be made by substituting blast-furnace slag for broken stone. The writer has known of concrete of this nature being put in place for less than $3.00 per cubic yard, where even the commonest kind of rubble masonry would have cost $5.00 per cubic yard.

Again in wet foundations where it is decided to use timber for footings, hemlock, which in this neighborhood can be put in bridge foundations for $25.00 per 1000 feet board measure, is just as good as white oak or pine, which will cost about $35.00.

An instance where timber footings were of great advantage came under the writer's observation during the construction of the new Sixth Street Bridge in this city. The centre pier of the new bridge was very close to the pier of the old Suspension Bridge, and the bottom of the new pier is eight feet lower than the bottom of the old pier.

There were fears that in dredging for the new pier the old one might be undermined, and to prevent this as much as possible a row of piles was driven along and as close to the old pier as they could be driven. A string-piece of oak timber was bolted to the tops of the piles and anchored back to the old pier by foxed ring bolts in the masonry. Back of this was driven 4-inch oak sheet piling as close together as possible.

When the dredging was nearly completed a diver was sent down to examine the foundation of the old pier. He found that the foundation of the old work was eight courses of 15-inch square timber, four longitudinal and four transverse courses. These were firmly drift-bolted together. He also found that for quite a distance along the side next the new pier the bottom had caved away for three feet back of the edge of the pier, and that all that was holding the masonry up on that side was the timber footings.

If the masonry of the pier had been started directly on the gravel, and had been thus undermined, it is more than probable that the masonry would not have held together, and as the old bridge was still in use and supported by this pier the result might have been disastrous. On discovering this state of affairs a large quantity of rip-rap stone was thrown in between the pier and sheet piling, and in addition a large amount of gravel was also thrown in. After these precautions the dredging was proceeded with and the coffer-dam for the new pier sunk, and the work prosecuted night and day till the new masonry was above water.

Again, in heavy masonry, such as bridge piers or abutments, money may be saved by using for backing rough stone, as it comes from the quarry, and filling the large spaces or cracks with concrete. This, I believe, makes even stronger work than where the backing is cut in courses the same thickness as the face stone.

The engineer in his practice will, at times, meet with conditions new to him, and conditions which are not to be found in any of the books on engineering; it is in cases of this kind where the engineer will have a chance to show his originality, and his ability to cope with new and unexpected problems. A few examples of foundation work which have been under the charge of the writer, may not be uninteresting, and some of you may in the future meet similar conditions, and may be enabled to improve on the methods related here.

Building No. 3, of the Star Fire-Brick Works, owned by Harbison & Walker, is situated at the northwest corner of Twenty-second and Railroad Streets, Pittsburg, Pa. The north side of the building stands on made ground, which at one time was beyond the bank of the river. On excavating it was found that

the material was composed of rubbish of all kinds, entirely unfit to build on. Test pits were sunk and it was found that it was about thirty feet from the surface to gravel. To have carried the entire foundation for this wall to that depth would have entailed a large expense, both for excavation and masonry. So a cheaper method had to be decided upon, which was as follows: At each pilaster of the wall, wells four feet square were sunk to gravel, and cribbed up with plank as the excavation progressed. The bottom three feet was not cribbed and the excavation was widened out as much as possible, to about six feet square. These wells were then filled in with concrete made with Rosendale cement, put in in six-inch layers and well rammed.

At the proper height, see Plate No. 1, skew-backs were built. Between the skew-backs arches composed of four rings of hard red brick were built, the haunches of the arches were levelled up to the top of the crown and the building started upon this foundation. As a precaution and to provide for the thrust of the arches at the corner of the building three two-inch rods were run through each arch, having at the ends one-inch plates six inches by three feet.

The foundations for all the machinery on this side of the building were prepared in the same way. The grinding pans, boilers and steam engines all stand on foundations of this kind. The building has been standing now about three years, and shows no signs of settling. A similar method was used in the Kansas City City Hall. The piers there were brick inside of boiler plate tubes, sunk to rock, and instead of arches I-beams were used.

At Eliza furnace No. 4, owned by Laughlin & Company, Limited, the engine house stands at least one hundred feet beyond what was the original bank of the river. The hot cinder from the older furnaces of the plant had been dumped over the bank from time to time, until ground enough had been made for several buildings of the No. 4 plant. Upon excavating for the foundations of the engine house and engine foundations this material was found to be as hard and compact as solid limestone.

After the excavation had progressed to the depth required a hole was drilled to the depth of eight feet with an ordinary hand drill, and the filling was found to be of the same nature to that

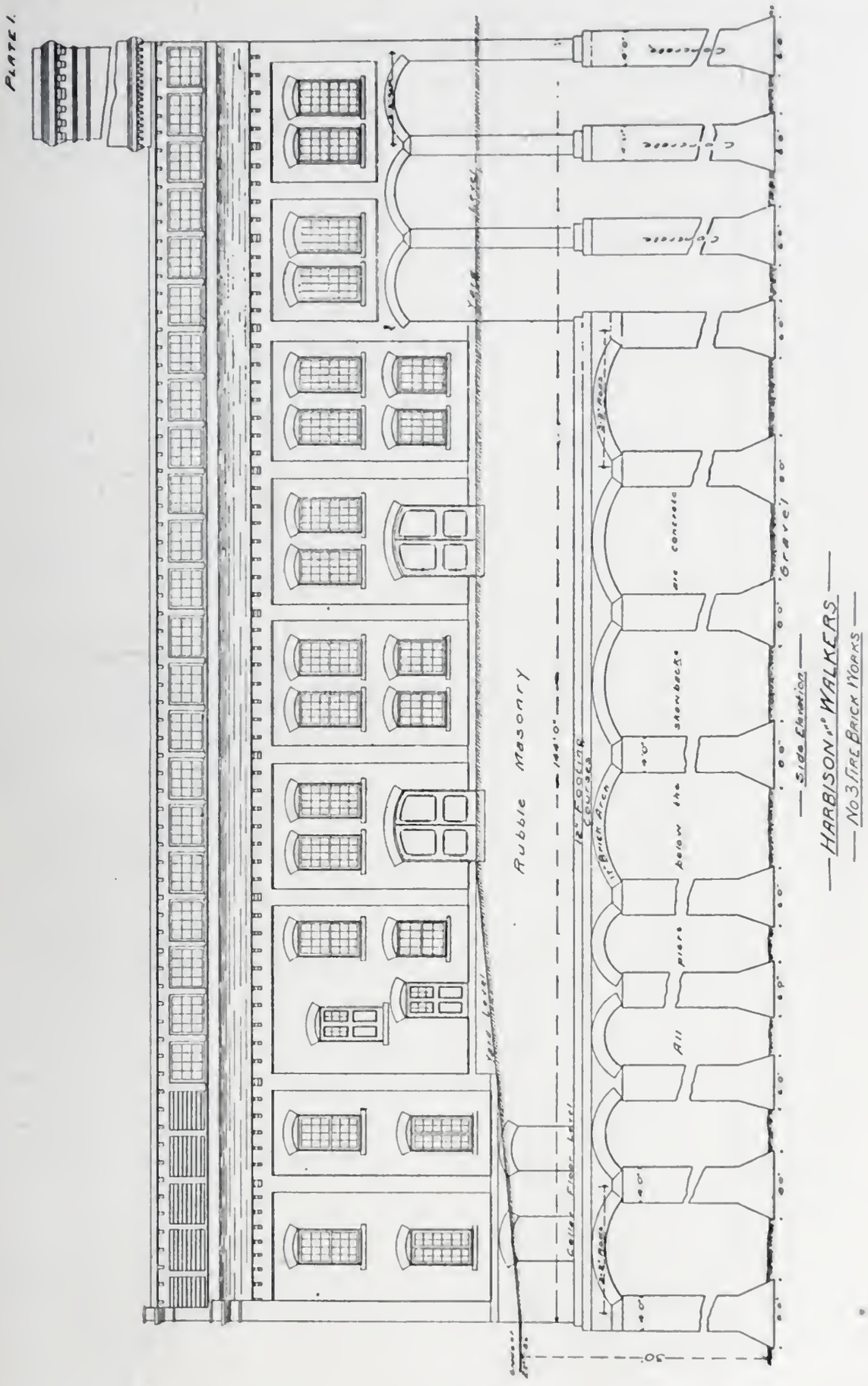
PLATE I.
Rubble Masonry
144'0"
12" Footing Courses
Cellar Floor Level
Yard Level
All piers below the sandstone
Gravel
Side Elevation
HARBISON & WALKERS
No 3 Fire Brick Works

depth, and from the recollections of the Superintendent, and also from the depth of the water at the edge of the cinder fill, it was pretty certain there was at least fifteen feet of the solid cinder upon which to build the foundations. Now the question to be decided was whether it would be safe to trust this and build five foundations seven feet by 20 feet and 15 feet high on which were to be placed five upright blowing engines having each two fly-wheels 20 feet in diameter, and which would run at 35 revolutions per minute, or ought we to excavate clear through this cinder to the original soil and drive piles. This latter plan would have taken a much longer time and much greater expense. After consulting with the owners it was decided to build the foundations on the cinder. This, therefore, was done, and the result justified the decision, as the five engines have been running for four years, and standing between the fly-wheels, when these engines are running at 35 revolutions, there is noticed no more tremor to the foundations than if they were built on solid rock.

At the Monongahela furnaces of the National Tube Works, McKeesport, Pa., the situation was different. The blowing engine plant was a duplicate of the one at Eliza furnace. The engine house here was located on a flat that was a few feet out of water at ordinary stage, and the soil was soft mud, and the floor level of the engine house was about 20 feet above this flat. A test pile 40 feet long was driven, and a few blows drove it down so that the top was flush with the surface. A follower, 10 feet long, was then put on and at a depth of 45 feet the piles brought up pretty solidly, so a length of 45 feet was settled on as the proper length of the piles. An excavation four feet deep was made covering the length and width of the space occupied by the five engines. The piles were driven three feet between centres. The intention was to fill the four feet in depth of excavation around the heads of the piles with concrete. However, when the piles were all driven there was no excavation to fill up, as in driving the piles the mud had pushed up, filling completely the spaces between them. We, therefore, built a light rubble wall around the piles and filled the wall, and on top of the piles with concrete. On top of this was built rubble masonry to the bottom of the foundations proper.

The building was started on footings of concrete about 3 feet deep and 6 feet wide, entirely independent of the engine foundations. The idea was, that by doing this any vibrations from the engines would not be as likely to be transmitted to the building as if it had been built on piles driven to the same depth as those under the engines. The result has proven the correctness of the theory, as both engines and buildings are standing to-day as firmly as when built three years ago. (See Plate II.)

In building the foundations of the Steel Works Department of the National Tube Works, various conditions were met with and had to be met in different ways.

Part of the work was on good hard cinder, such as is met with at Eliza furnace, and the same methods were adopted at this place as the last named. Part of the work was in low swampy ground, and piling had to be resorted to. Some of the building had to be built on ground that had been filled up with loose cold cinder to a depth of 20 feet. One building, only one story high, having a 13-inch wall, stood on such ground. It would have been very expensive to have excavated 20 feet for the foundation of such a light building, so a different method from any given above was taken to prepare a foundation.

The excavations for the walls of the building were made to a depth of 4 feet, or just below frost-line. A long iron bar was then driven through the loose cinder, and worked so as to make as large a hole as possible. These holes were made about 12 inches, centre to centre, for about 6 feet in length of the trench. Grout of pure cement was then poured in the holes till they would take no more. Then another section would be prepared in the same manner. After the whole trench had been treated in this manner, the foundation proper was started.

Some time after the building was finished, it was necessary to build a large stack foundation near it. This had to go to solid ground, and, on excavating for it, the loose cinder between it and the building caved in, leaving the grouted cinder, or cinder concrete, it might be called, standing as firm and as solid as a stone wall.

These few examples that have been given will, as the writer has

said, serve to show the many and various problems the engineer meets with, and the way some of them have been solved.

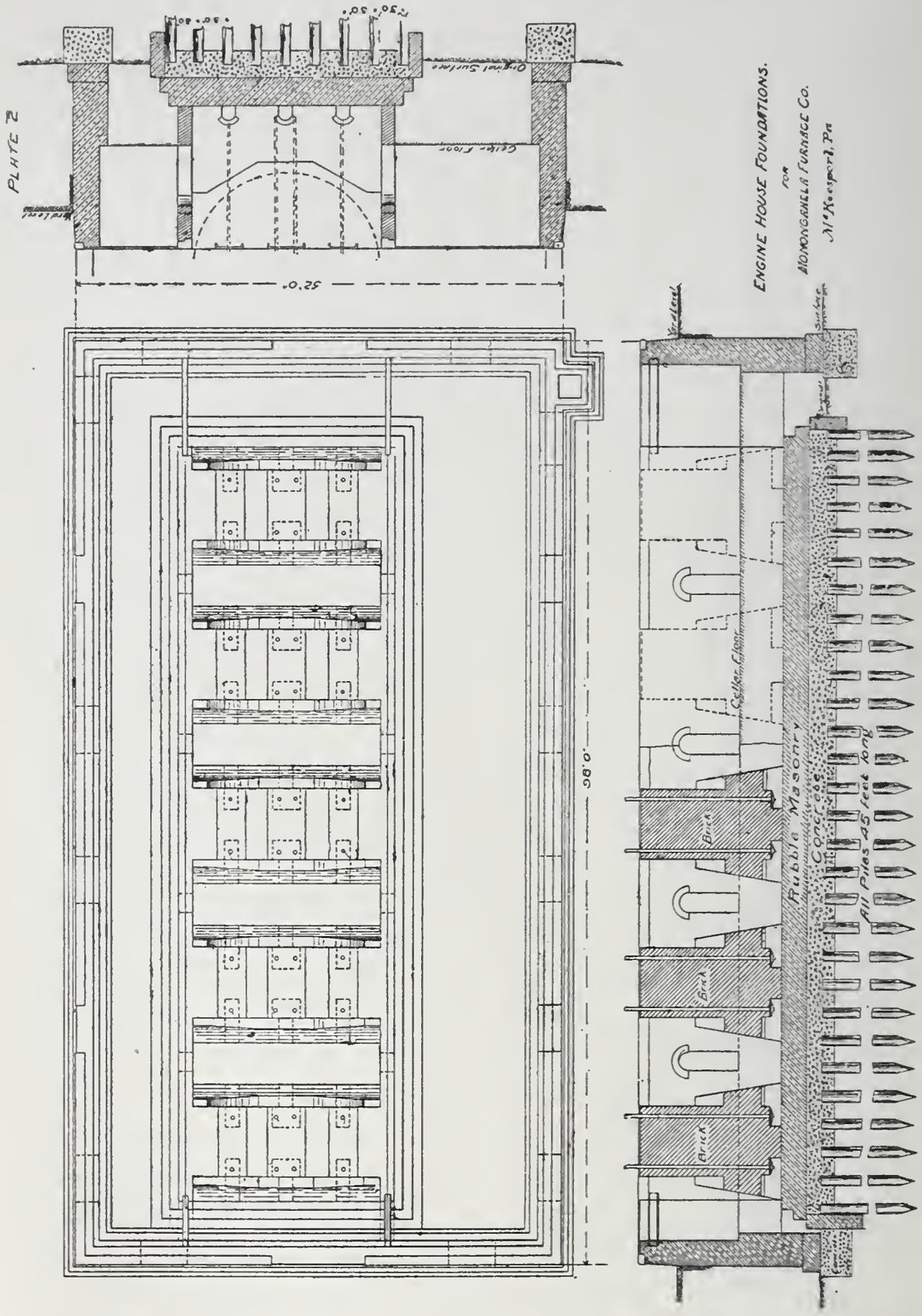

A few practical hints in regard to foundations for machinery may be interesting to some of you. The writer does not think it

worth while to say anything here regarding foundations for bridges, as this part of the subject was well covered some years ago in a paper read before this Society by Mr. P. F. Brendlinger.

For all kinds of machine foundations, such as steam-engines, rolling-mills, shear and hammer foundations, such as are built in so many of the manufacturing establishments in this city, it is almost the universal opinion that good, hard, red brick, laid in Portland cement, is the best foundation that can be built.

They are easily and quickly laid, and foundations of very intricate shapes can be made without much cutting of the brick. The courses should be laid alternate header and stretcher courses, so as to break bond in all directions as much as possible.

The bricks should be laid in a good, heavy bed of mortar, leaving about a half-inch in the vertical joints, which should then be well slushed in with thin mortar. It is better to slide each brick up against the preceding brick, carrying enough of the bed mortar with it to fill the vertical joints. This, however, is an operation that the average bricklayer seems to have an aversion for, and, taking this into account, it is perhaps as well to adopt the first-mentioned method. A foundation laid as above specified will, in a few months, become practically a monolith, and the writer has seen, when tearing out such work, the bricks themselves break before the cement.

As to foundation bolts, there are two ways of setting them; one is to build the bolts in with the masonry, and, second, to leave holes through the masonry, through which the bolts can be dropped after the bed-plates have been set. When this is done the lower end of the bolt has no head, a slot and key being provided, and pockets must be left in the foundation, reaching from the outside to the bottom of the bolt-hole, large enough to allow a man to reach in and insert the key in the slot. When the bolts are built in the masonry, they are provided with heads and large wrought- or cast-iron washers or anchor plates. The bolts should be hung from a good strong template and the bolts levelled up at the top, for foundation bolts are very seldom of the exact length called for, and if the anchor plates are levelled up

it is very likely some bolts will be too short to grip the whole nut and others will be too long. No matter which of the two methods are used, it is well not to build the bolts in solid, but to leave the holes in the masonry so as to give the bolts a couple of inches play, for it is very seldom that the bolt-holes in a cast-iron bed-plate are the exact distance apart called for on the drawings. The foundations should be built about an inch and a half lower than the drawings call for, so as to allow leveling up the bed-plates with iron wedges. When this is done the space under the bed-plates should be grouted with Portland cement grout. This will run in around the bolts and make a good solid piece of work.

In hammer foundations it is usual to have the legs of the hammer and anvil block on separate foundations, as that under the anvil block is bound to settle, so that by having them separate one can settle without disturbing the other. Under the anvil should be several feet of oak timber well bolted together, preferably on end. This makes a good cushion, as it is better not to have the anvil block on too rigid a foundation.

In foundations that are liable to be exposed to heat, such as open-hearth and heating furnaces, it is well to lay a foot at least, below the surface, with lime-mortar or fire-clay, as either of these stand heat better than cement-mortar.

As to the cost of foundation work of various kinds, concrete can be put in place for from $3 to $6 per cubic yard; ordinary rubble masonry, built with two-man stone, $4.50 to $6 per cubic yard; cut stone work, $9 to $12 per cubic yard; red brick, in Rosendale cement, about $8 per cubic yard, and if laid with Portland cement about $9 per cubic yard.

Discussion.

Mr. T. P. Roberts: Mr. Wilkins's statements in regard to the pouring of the cement into the loose cinder in order to make a firmer foundation for his one story building, and his later observations of the effect of the grout in solidifying the mass are very interesting and suggestive. In my opinion he could safely have built a much heavier wall upon the foundations so treated than

was actually constructed. I recollect many years ago hearing of a reservoir in New England excavated in gravelly material, which was reported to have been made water-tight by pouring grout into holes in the manner prescribed by Mr. Wilkins, until the soil would absorb no more. We have frequently, when unable to locate the source of leaks under the floors and walls of our locks in the Monongahela, by boring holes at intervals through the floors or walls (sometimes holes twenty-five feet down through solid masonry) and pouring in cement have greatly strengthened the foundations. It may be depended upon that the grout will not run into places which don't require it. In this way we have used during the past ten years thousands of barrels of cement and have undoubtedly made our walls, when not on solid rock, safer and better able to withstand hydrostatic strains than when originally constructed. I have never had, as Mr. Wilkins had, the opportunity to see and explore the trackways of the grout used in this manner, but from his report it has undoubtedly become a monolithic structure of very curious shape. And what could be better than that for any wall—not merely a monolithic prism made to fit a trench but a prism from whose sides and bottom concrete roots radiate. There are some situations where this method might be superior to piling in distributing the load. It would tend to equalize the resistance to pressure in soils of unequal porosity and density. Grout so used tends further to improve the foundation by fixing the finer particles of the soil in a matrix which water from springs or leaky pipes might carry away. Nine times out of ten the cause of the failure of foundations is due in some way to the action of water. I apprehend, however, that a practical difficulty may occasionally be met with in getting soils to "take" the grout as freely as might be desired. But where the refusal of the soils to do this is very persistent, it would indicate to my mind that it is safe for ordinary construction—and safe for even extraordinary constructions, provided, of course, it is evenly loaded, etc.

Mr. W. G. Wilkins: I would like to call the attention of the members to the importance of finding out before you start a foundation what you will have underneath it,—by taking soundings or by driving down a bar. I remember some years ago while re-

building the new Brinton stone arch bridge on the Pennsylvania Railroad, we had occasion to tear down the old abutment that had carried the old iron bridge for a great many years, and it was very important to get to rock. We tore the old abutments down and found they had been built on two courses of timber—and under the timber was gravel. We started to excavate to bed rock for the new foundation. After excavating just about one foot we struck solid rock. I have no doubt that when the old foundation was built, the contractors when they struck gravel thought that this was good enough to build on, and built the masonry without trying to see what was under the gravel, or how deep it was to rock.

Mr. T. H. Johnson: Following the line of Mr. Wilkins's last remarks, I would like to tell you of a foundation I had occasion to examine. In tearing down an old abutment I found that in excavating for it they had gone two feet into a bed of clay which was three feet thick, leaving one foot of clay below the bottom of the wall. After we had torn down the old masonry and came to probe the foundations with rods, we found that under the one foot of clay there was an unknown depth of quicksand. At any rate, we were not able to reach bottom with the means at hand. That abutment, however, notwithstanding the doubtful character of its foundation, had stood for thirty years without movement. Then it settled—not suddenly, but gradually. It began to lean outward. The base crushed down into the clay and the quicksand. Why it did not do that sooner, I do not know.

Mr. G. S. Davison: I do not agree with Mr. Roberts altogether. The material that Mr. Wilkins speaks of in his paper was blast-furnace cinder. Of course there are a great many voids in the material, and the cement would easily find its way through and among these voids and here solidify, and in time make a compact mass; I can very readily see how that could occur; but to follow out Mr. Robert's idea—that you might drill holes in almost any material and do the same thing and have about the same result—I doubt whether that could be accomplished in clay, for instance. The hole itself would fill with cement and harden, and you would simply have a cylinder of cement the size of the hole,

and unless those holes were numerous enough to give as great a bearing as pile surfaces, I cannot see how it would be so good. As to drilling these holes in sand or gravel, I can imagine that the cement would have a better opportunity to spread than in clay, but I cannot see how the cement would permeate the sand or gravel to any great extent, so I do not believe that plan would hold good except where the material possessed a great many voids. As to the case that Mr. Wilkins speaks about, where he went one foot lower than somebody else had done, and found rock, I was recently engaged with a case where we drove piles to rock only six feet deep. It was six feet on one end of the bridge foundation and thirteen feet on the other. I suppose that the fellow that comes after us would think that that was a very curious proceeding,—not to have gone down without masonry,—but we could get just about as good bearing without going to the rock, and save the expense of going there. It was a case in which there was a very slight chance of there being a washing or scouring at that point at some future time. It was thought that driving piles even this very short distance would protect the abutment. In case one edge of it would be scoured, the piles, being well knit together, would still hold the abutment in place, even if the scouring should occur.

Mr. G. H. Hutchinson: I would like to say something in addition to what Mr. Roberts said about cement in foundations. On the New York, Providence and Boston Railroad, on account of changing a through bridge to a deck bridge, it was necessary to cut down the height of the abutments, and the old masonry had been laid rather loosely, so we took off several of the upper courses and grouted the remaining courses. Afterwards we found it necessary to remove the top course which had been left. We found the grout below perfectly solid. Every space was filled, and it seemed to be a very good job in every respect.

Mr. Roberts: I do not know, of course, of anything having been done to show how far the grout goes into the sand. It probably enters a little, and it presents a rock surface, at all events, affording a better resistance than a pile would have to the same area. Of course, in very compact clay, the mere act of driving

the bar down would make the surface of the hole very smooth, perhaps, as Mr. Davison suggests, impervious to the grout. Of course, in that case, we do not want any better foundation. I am speaking of ordinary structures—those of ten, fifteen, or twenty feet. In a great many cases we could improve foundations and make them more uniform where the foundation varies on long lines, like the Exposition building, for instance; but I have seen hundreds of barrels of grout run into holes to improve foundations on the Monongahela river at the locks. I know that holes and spaces, sometimes three and four feet deep under walls, have been washed out and afterwards filled with grout. I think probably 20,000 barrels of cement have been used along the Monongahela river in the last fifteen years in repairing holes of that kind.

Mr. Swensson: There is one point which came to my notice not long ago in the matter of building foundations on blast-furnace slag, and that is to know whether the slag has slacked or not. Not long ago a mill building had to be put up on filled ground near a creek, this filling being blast-furnace slag. Shortly after that, the building being only partly erected, the creek rose very high and soaked through the filling of the slag, the slag slacked, and the foundations under each column of the building settled in various directions; the building became distorted, some of the columns only hanging to the roof. This necessitated the taking down of the building, reconstruction of the foundation, and re-erection.

Mr. Roberts: Is it not the universal rule for furnace slag to slack?

Mr. Swensson: Yes, sir; it appears to be the universal rule. It slacks like lime. We have used slag in making a solid and smooth floor for the material ground by simply spreading it over the ground and letting the air slack it.

Mr. J. W. Camp: Some of it will slack and some of it will not. It altogether depends on the composition.

Mr. Roberts: I have seen brick buildings put up along the Monongahela river on furnace slag about 25 feet deep. The slacking process had taken place, it seems, as I know that these buildings I refer to were very well founded.

MR. WILKINS: In the case I refer to the slag was run in hot. For our foundation we had to drill and blast just as though it was through solid rock. The slag was solid and compact so that no water could have gone through it. It was back fifty or sixty feet from the river. I had occasion to-day to notice the excavation for a foundation we were preparing to build. The excavation had to be made through slag that had been run in hot and that was very compact. I thought I would try to see if I could grout that. I had mixed up a barrel of Portland cement in a very thin grout, and I do not believe that any of it permeated the slag; it was just like pouring it on top of that marble, it was so hard.

MR. H. J. LEWIS: I would like to ask if any one has had experience in forcing grout into the ground, either by gravity from a considerable height or by other mechanical means, such as pumping.

MR. ROBERTS: Our walls were 25 feet high, with two or three timbers under them; we bored through that with three or four inch holes and poured in the grout. We sometimes have on top of that a pipe five or six feet high, with a large funnel, and that makes the hydrostatic pressure force it in, about 15 pounds per square inch. Of course this will force the grout in every possible direction where there is any chance for it to go. I would say, that in running it into the clay, or sandy foundations, the same method can be used; by pouring it in from a height would be equivalent to forcing it.

AN IMPROPERLY DESIGNED CHIMNEY.

BY GUSTAVE KAUFMAN, C. E.

(Read before the Engineers' Society of Western Pennsylvania, March 21, 1893.)

SEVERAL years ago, the writer was called upon to report on a chimney-stack, 125 feet high, which had been damaged by a severe wind-storm, and to advise whether the chimney could be repaired and put in absolutely safe condition.

The following is a description of the stack; it was square, and built on a square brick pedestal:

Dimensions.

Total height, from foundation to top,	137 feet 6 inches.
Height from floor-line to top,	12 feet.
Top of pedestal below floor-line,	6 inches.
Top of pedestal (sq.),	10 feet 10 inches.
Bottom of pedestal (sq.),	12 feet.
Shaft,	125 feet 6 inches.
Base,	10 feet 5 inches by 10 feet, outside measurement.
Top,	6 feet 6 inches by 6 feet 6 inches, outside measurement.
Cornice projection,	8 inches.

Foundation.

This is on a bed of sand and blue clay, in which is interspersed fine gravel. The bearing-power of this soil has not been definitely determined, but is said to be very good. A bed of concrete (made of 1 part of Dyckerhoff Portland cement, 2 parts of sand, and 4 parts of broken stone) 30 inches in thickness was first laid, at a depth of 12 feet 6 inches below the floor-line. Imbedded in the concrete are two layers of 5-inch I-beams, weighing 10 pounds to the foot, and placed 3 feet apart. On top of the concrete, three courses of cut-stone each 18 inches thick were placed. Offsets are each 9 inches.

By reference to the accompanying Plate, it will be seen that the southern side of the shaft is placed in the same vertical plane as the southern edges of the foundation courses. There are no offsets on this side. This was done to utilize all the space in the boiler-house. (The stack in question is in a crowded city, and the southern edge of its foundation is a partition line.)

Brick Pedestal.—Upon the above foundation the brick pedestal was started and carried to the height shown, viz., 5 feet. Upon this pedestal was placed the shaft, consisting of the outer shell and the lining or core. The sizes of the various sections can be seen on the plans. These show that for 40 inches from the bottom the fire-brick lining was to be bonded into the outer shell, but this was not done in construction. Above this point there is an air-space of about 4 inches between the outer shell and lining.

Plates, $\frac{1}{2}$-inch thick, at intervals as above, were used to tie the lining to the outer shell.

Openings.—At the bottom of the stack, on the east side, is an arched opening, for the purpose of cleaning the stack. It is 2 feet 2 inches wide and 60 inches high in the clear. On the north side, 14 feet $2\frac{1}{2}$ inches above the top of the pedestal, is an arched opening, 4 feet 6 inches wide and 5 feet 2 inches high in the clear, to admit the flues. Immediately above this arch, built into the brick-work, is a 4- by $\frac{3}{4}$-inch flat iron bar, extending across the full width of the stack, to take up the thrust of the arch. A vertical rod, 2 feet long 1 inch diameter, passing through the 4- by $\frac{3}{4}$-inch flat iron bar on each side of the chimney, is imbedded in the brick-work.

Batter, 1 in 48.

Total weight, 1,170,000 pounds.

Outer Shaft.—Made of hard-burned brick and laid in cement and sand.

Building Operations.—The stack was built as rapidly as possible, from an outside scaffold, the horizontal braces of which extended into the shaft the thickness of a brick, and which were not removed as the stack was built up. When the stack had reached a point a few feet above the arch in the north face, a bad crack appeared on this side, extending from the bottom of the flue-opening about 5 feet downwards. To remedy this, a 2-inch round rod with screw ends was inserted through the centre of the north side, at the joint at the bottom of the flue-hole, 14 feet $2\frac{1}{2}$ inches above the top of the pedestal.

One day, when there remained probably one-half of an hour's work to complete the shaft, brisk winds blew from 10 A.M. to 6 P.M., with rate varying from 18 to 27 miles per hour, from a southeasterly direction. This would be about vertically against the stack. The stack oscillated, but no measurement was taken of the amount. The workmen report that the motion was regular, and upon a cessation of the wind the stack came gradually to a rest. Towards the evening of this day, a number of cracks appeared on the north side, and some also on the east and west sides. The arch on the north side bulged outwards, and there

PLATE I.

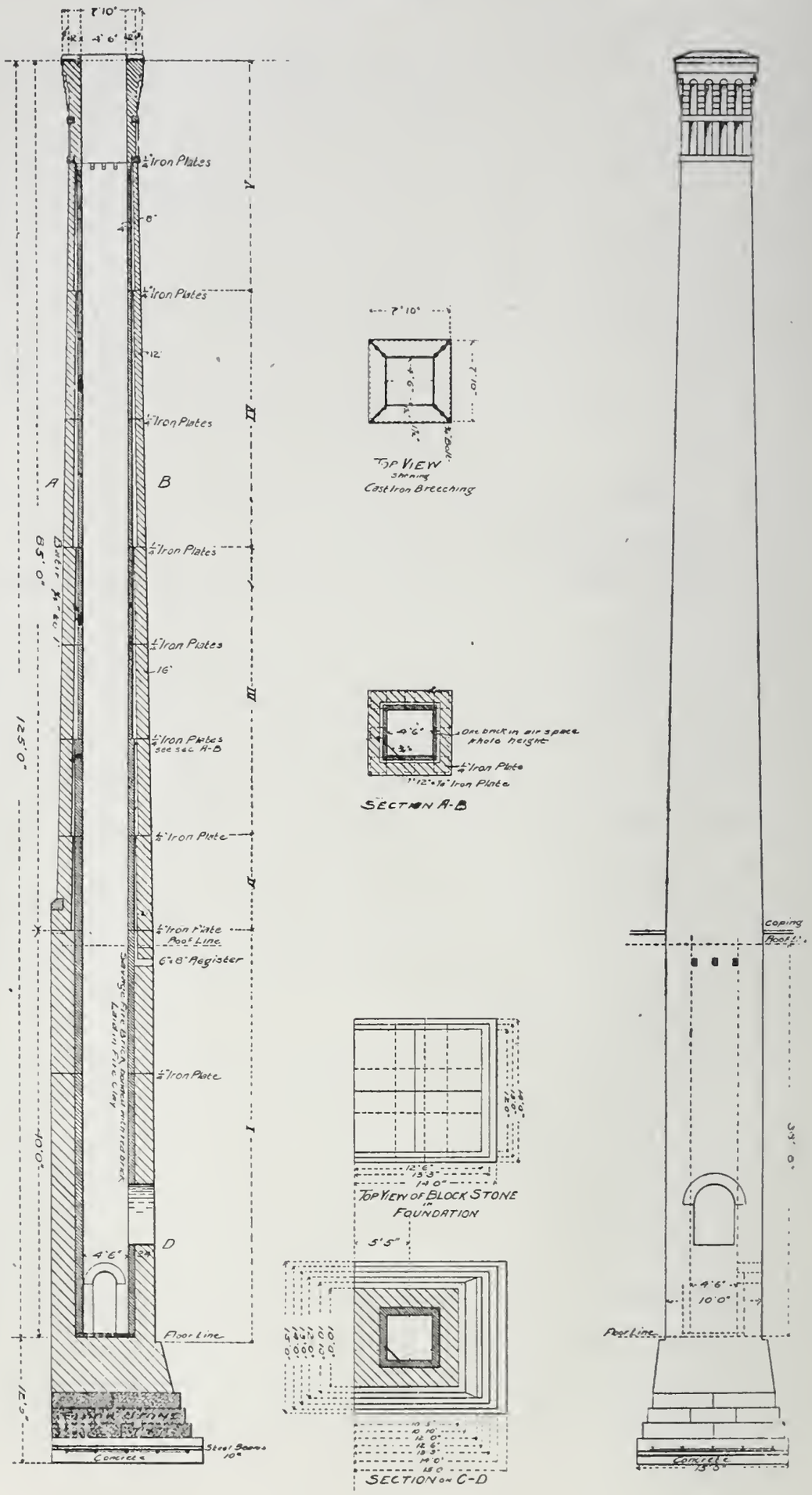
Iron Plates
Iron Plates
Iron Plates
Iron Plates
Iron Plates
Iron Plates
Iron Plates see sec. A-B
Iron Plate
Iron Plate
Floor Line
6"x8" Register
Iron Plate
Floor Line
Concrete
Steel Beams
A
B
C
D
Top View showing Cast Iron Breeching
Section A-B
Top View of Block Stone in Foundation
Section on C-D
Coping
Floor Line
Concrete

were indications that the chimney would collapse through weakness at this point. As rapidly as possible, during the night of the same day, the east and west faces were firmly bound together by four $2\frac{1}{2}$-inch round rods, connected to four horizontal beams, these in turn pressing against four upright beams placed on each corner of the stack, on the east and west sides.

Plate I. shows the structure as originally designed.

Plate II. shows the cracks, etc., in the chimney, from measurements taken by the writer a few days after the storm.

A report was asked for as to whether the temporary arrangement of the beams and tie-rods could be relied upon, and whether the same method, or any other, could be safely used, and the stack left standing. During the preparation of the paper, about two weeks, the writer was kept advised as to the daily condition of the stack. No further cracks appeared, and the stack remained in the same condition as it was left on the day of the storm. There was no wind-storm in the meantime, however.

The following is a summary of the calculations:

Area of base, ...	225 sq. ft.
Average pressure, ...	2.6 tons per sq. ft.

On account of the eccentric loading of the foundation the pressure on the southern edge is greater than on the northern side.

If it be considered that the pressure varies uniformly from the southern side to the northern side, it can be shown theoretically that the pressure on the southern edge is about 4.6 tons per square foot. This value is too high. The exact pressure cannot be calculated, but in our judgment it is about 3.5 tons per square foot. The soil on the southern edge is compressed more than on the northern edge. The pressure on the southern edge of the foundation will be largely augmented by a northerly wind. The stack should be so designed that it will withstand safely a wind pressure of 50 pounds per square foot. The pressure on the southern edge due to this wind is 2.2 tons per square foot, and adding to this 3.5 tons for the weight makes 5.7 tons per square foot, entirely too high for the soil.

PLATE II.

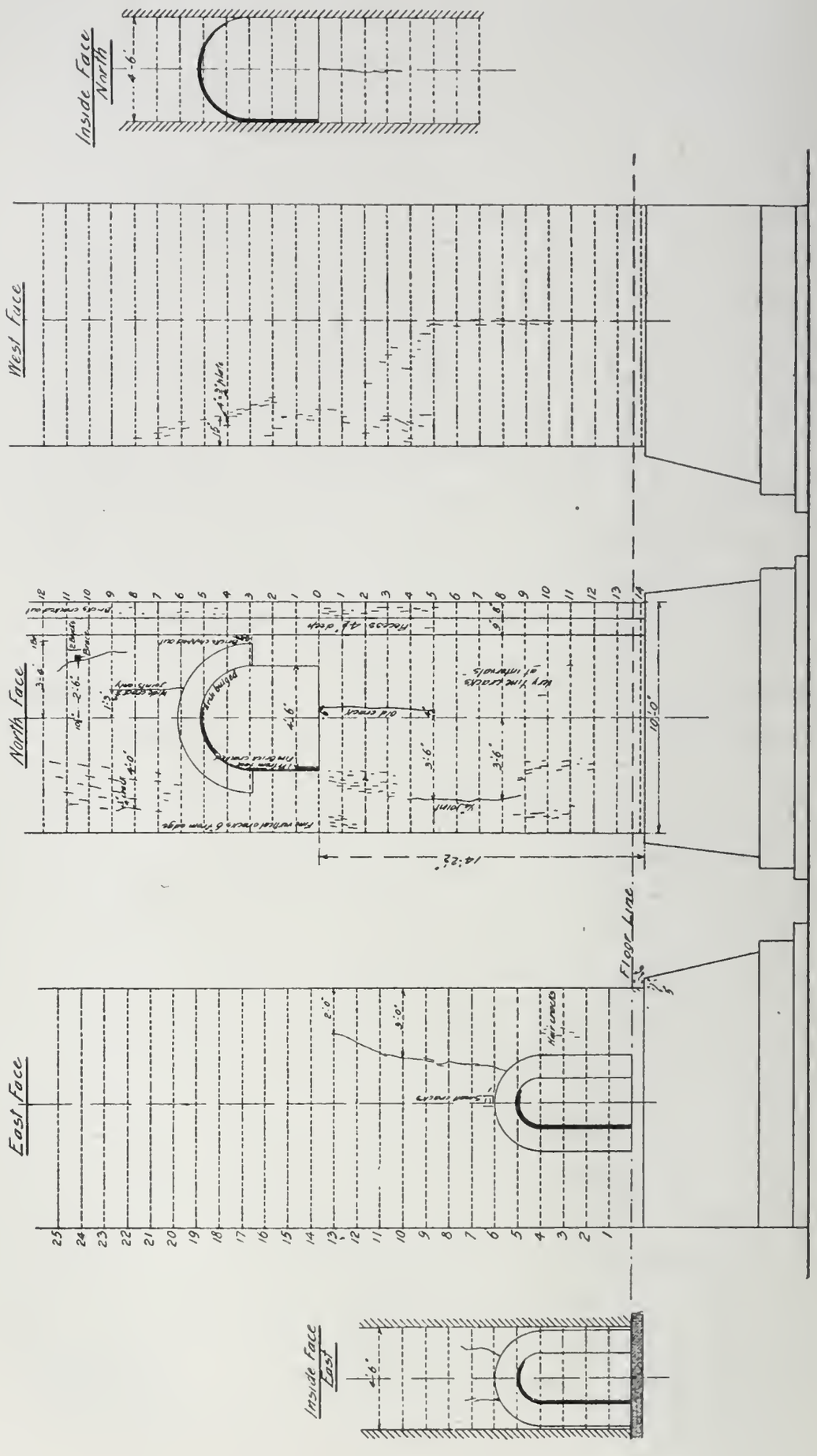
Inside Face North
West Face
North Face
East Face
Floor Line
Inside Face East
14'-2½"
10'-0"

The stack itself was reviewed in accordance with the principles set forth by Prof. Rankins, under whose directions the highest and most important chimneys of England were constructed.

The following formula was used to calculate the maximum safe wind pressure at the various joints:

P. A. H. = $\frac{1}{3}$ Wj.
P = Wind pressure per square foot.
A = Area of side above joint under consideration.
H = Height of centre of gravity.
W = Weight of shaft.
j = Breadth of shaft at joint.

Course	I.	P = 50.7	lbs. per	sq. ft.
"	II.	P = 45.6	"	"
"	III.	P = 40.8	"	"
"	IV.	P = 53.1	"	"
"	V.	P = 72.5	"	"

At a section taken at the springing line of the arch of the opening for the flues in the north side it was found that the pressure due to the static load was 11,188 pounds per square foot, and that due to a wind pressure of 50 pounds per square foot from the south was 18,651 pounds per square foot, making a total of 29,839 pounds per square foot, or 207 pounds per square inch on the brick. As the pressure due to the wind should not exceed the pressure due to the static load, the wind, therefore, that will give a pressure of 11,188 pounds is the maximum safe pressure that the stack will stand at this section. This is 30.2 pounds per square foot.

Several Rules for the Construction of Tall Chimneys.

1. On compressible soils the foundation should be equally resistant.

2. *Weather.* Shafts should be erected in the summer months, and on no account should the work be proceeded with in frosty weather.

3. *Progress.* Shafts should be constructed at the rate of from 2 to $2\frac{1}{2}$ feet per day.

4. *Bend.* There should be three or four courses of stretches to one course of headers to increase the longitudinal tenacity, which resists any force tending to split the chimney. Hoop iron built in the horizontal joints with ends turned in the vertical joints is very desirable and largely increases the longitudinal tenacity.

5. *Openings.* Openings in the chimney should only be made at the bottom, and when such are made should be thoroughly buttressed to withstand the thrust. A better plan is to make them in the pedestal.

The London Metropolitan Board of Works have a set of rules governing the construction of tall chimneys, giving size and method of construction. They are as follows:

1. Every chimney shaft, for the furnace of a steam boiler, distillery or manufactory, shall be carried up throughout in brickwork and mortar, or cement of the best quality.

2. Every furnace chimney shall be built upon a bed of concrete to the satisfaction of the district surveyor.

3. The base of the shaft shall be solid to the top of the footings, and the footings shall spread equally all around the base by regular offsets to a projection on both sides equal to the thickness of the wall at the base.

4. The width, measured externally of a furnace shaft at the base, or at that portion immediately above the footings, shall be as follows:

If square on plan, at least one-tenth of the total height of the shaft.

5. Every furnace chimney shaft shall have a batter of $2\frac{1}{2}$ inches at least in every 10 feet of height, or 1 in 48.

6. The brickwork shall be at least $8\frac{1}{2}$ inches in thickness at the top of the shaft and for not exceeding 20 feet below, and shall be increased $4\frac{1}{2}$ inches in thickness for every 20 feet of additional height measured downwards.

7. No portion of the walls of a furnace chimney shaft shall be constructed of firebrick, and any firebrick lining to be used must

be in addition to the thickness of, and independent of, the brickwork.

8. Every cap, cornice, pedestal, string course or other variation from plain brickwork shall be in addition to the thickness of brickwork prescribed by the foregoing rules, and no cornice shall project more than the thickness of the brickwork at the top of the shaft.

Chimney under consideration constructed as follows:

Sec. 5,	. .	8	inches	thick	for	22	feet,	6	inches.
" 4,	. .	12	"	"		25	"	0	"
" 3,	. .	16	"	"		28	"	3	"
" 2,	. .	20	"	"		9	"	3	"
" 1,	. .	25	"	"		40	"	0	" 125 feet.

Size, if designed in accordance with Board of Works rules:

Sec. 6,	. .	$8\frac{1}{2}$	inches	thick	for	22	feet,	6	inches.
" 5,	. .	13	"	"		22	"	6	"
" 4,	. .	$17\frac{1}{2}$	"	"		20	"		
" 3,	. .	22	"	"		20	"		
" 2,	. .	$26\frac{1}{2}$	"	"		20	"		
" 1,	. .	31	"	"		20	"		125 feet.

The following conclusions were then drawn:

1. The external breadth at the base is too little; should be no less than 12 feet 6 inches.

2. The foundation and the soil on which it rests, are good, but on account of the eccentric loading a large element of uncertainty appears. The resisting power of the soil on the north side of the chimney is less than on the south side and a brisk southerly wind will easily cause a slight subsidence on the opposite side. This would not be permanent, but upon the cessation of the wind, the foundation will return to its static condition. The brick in the projections on the north side of the pedestal were cracked; this is due to the condition named. By making the beams longer along the southern edge and giving the foundation a trapezoidal shape, a much better condition of affairs would have been attained.

3. The use of the quarter-inch plates to tie the lining to the

outer shell is of doubtful utility and might be of great detriment on account of the unequal rate of expansion of the fire-brick and outer shell.

4. The arched opening for the flues 14 feet above the base should not have been permitted. It should have been placed at the bottom and the flues carried to it.

5. The stack does not appear to have been built too rapidly. The best time made was 10 feet in three days. This is not too fast, especially since cement was used. Moreover, the concrete bed had three weeks to settle before the I-beams were put in.

6. In regard to the stability of the stack under heavy wind our deductions from the calculations are as follows:

Course 1.—Barely within the necessary safe limit.

Course 2.—Not up to the safe limit.

Course 3.—Weak. Considerably below the safe limit.

Course 4.—Just about right.

Course 5.—Safe.

At the springing line of the arch, the stack is lamentably weak, only being able to stand 30.2 pounds per square foot.

7. In our calculations we assumed that in each joint the pressure was uniformly distributed. As this is not exactly so, the results are somewhat high. Considering this, the wind-pressure that the stack can safely stand is not greater than 20 or 25 pounds per square foot.

8. The wind-pressure that caused the trouble no doubt reached this point.

The cause of the shattering of the brick of the stack on the lines shown, is already explained by the above consideration.

9. The bend of the lower part of the shaft is largely destroyed and can no longer be depended upon.

10. The trouble has been caused mainly by defective plans. The workmanship appears to be good with the exception of allowing the horizontal braces of the scaffolding to remain in the stack. These should be supported either wholly by the stack or by the vertical posts of the scaffolding. The settlement of the stack will not then be communicated to the scaffolding. The cracks about these braces are caused by this procedure.

11. In firing a chimney, large stresses are produced by the expansion of the fire-brick lining with the shattered condition of the stack at the lower end; it is extremely doubtful that it will be able to withstand stresses due to this cause.

12. We cannot see any way of properly strengthening at all of the weak places. To merely tie the east and west sides together at the upper opening would only strengthen at that point, and is in reality of doubtful utility.

13. Our final opinion on the matter is that the stack should be taken down and rebuilt on entirely different designs.

Discussion.

Mr. Roberts: I am aware of two instances of work about chimneys that may be of interest. One of them,—the destruction of a chimney in St. Louis about twenty years ago. I was not a witness of the manner in which it was removed or taken down, but my father was there with other engineers. My recollection is that the stack was about in the neighborhood of 200 feet high, and owing to a change in the construction of the plant they determined to take it down. They finally concluded that it would involve a great deal of cost to put up scaffolding and take it down from the top, so they concluded to take it down by blowing out the base of it,—after removing some of the brick-work, as much as was thought safe. These engineers were all present in order to see the fall of the chimney, and various theories had been advanced in regard to how the chimney would fall. All hands were disappointed, however, for instead of falling out to any great distance, as soon as the blast was set off, the chimney began to crumble at the base, and went down vertically into a heap of brick. I suggested this for one chimney, but the experiment was not tried. The chimney was leaning. Sawing out in the convex side some mortar joints and bricks so as to bring it to a vertical position. This was actually done on a stack in Cumberland, Md. Not a very tall one. There is a stack in this city that I looked at several years ago—about 135 feet high—brick, leaning, alarming the people at the plant very much. They thought that it was over the vertical, but I discovered that it was just vertical on one

side and leaning at the top about two and one-half feet. That was caused by depositing iron-ore at the base. The iron-ore had been piled on this ground to a depth of more than twenty feet, and that immense weight on that side seemed to press down the ground in such a way that this chimney began leaning, and was eventually torn down.

Adjourned.

R. N. CLARK,
Secretary.

APRIL 25TH, 1893.

MINUTES OF CHEMICAL SECTION MEETING.

Mr. Fred. Crabtree, Chairman.

Mr. James O. Handy, Secretary.

Thirty-five members and others were present.

The Committee on Water Supply, appointed at the February meeting, reported progress.

Prof. F. C. Phillips read a paper on "Experiments With the Anderson Process in Purifying Allegheny City Water." This paper was discussed by Messrs. Crabtree, Clark, Roberts, Handy, Weed, Camp, and Stahl.

Mr. James O. Handy explained facts which must be considered in order to secure a proper "Interpretation of the Results of Chemical Analysis of the Allegheny River Water."

NOTES ON THE PURIFICATION OF ALLEGHENY RIVER WATER BY THE ANDERSON PROCESS.

BY FRANCIS C. PHILLIPS.

THE use of iron for the purification of water is not a new one. That a piece of scrap-iron thrown into a well would improve the condition of the water was known to many an old farmer before the days when chemists and engineers were called on to discuss the problems of water supply.

The beneficial effects of spongy iron in the filtration of water

on a small scale were first pointed out by Bischof, although for many years after the discovery was made the real value of iron as a purifying agent was little understood.

The first experiments in the employment of iron for the purification of water for a city supply were made at Antwerp in 1883.

The river Nethe from which the Antwerp water was drawn had long been considered very impure, being muddy and charged with much organic matter derived from town drainage and from soil.

The iron used in these experiments was produced by reduction of an iron-ore without fusion, and was therefore of a highly porous and spongy nature.

A filter bed was formed of this material mixed with fine gravel. This was covered by a layer of sand. The water after passing a settling reservoir flowed through the iron filter. Having taken up a small quantity of iron and assumed a brownish color, the water was finally passed through a second filter bed of fine sand in order to remove the iron oxide sediment. The results were very satisfactory as regards the clearness and organic purity of the filtrate, but the iron filter after a period of less than two years became choked and its use was finally abandoned.

The method was then modified so as to bring the iron more effectually into contact with the water. The iron sponge was placed in a cylindrical iron vessel made to revolve horizontally. The water to be purified was pumped in a continuous stream through the cylinder, in the direction of its axis. By the motion of this cylinder the iron sponge was rolled about in the water.

In contact with the iron, the water at once assumed a brownish-black color, from oxide of iron held in suspension. In its discolored condition the water is run into a settling-tank, in which a complete change in the character of the iron precipitate occurs. The inky color gives place to red, and nearly all the iron is deposited as ferric hydrate, although the water is still somewhat discolored. By filtration through a layer of sand the residual floating particles of the precipitated oxide are completely removed, and the filtrate may then be nearly as clear as distilled water.

The process is carried out, therefore, in three stages:

1. The water, by agitation with metallic iron, becomes strongly impregnated with ferrous oxide.

2. By exposure to air in a shallow reservoir, this partially dissolved ferrous oxide is oxidized and caused to coagulate and subside as ferric oxide.

3. By filtration the ferric oxide is wholly removed from the water.

This filtration of the water subsequent to the action of the iron has usually been considered absolutely essential to complete purification.

The cylinder in which the treatment of the water is carried out is known technically as the "purifier."

In order that the corrosion of the iron and consequent formation of iron oxide might be accelerated, and the time of contact correspondingly shortened, air may be blown into the water as it enters the purifier. Such æration is found to be of great advantage.

Soon after the introduction of the process an important improvement was made as regards the iron employed. It was found that the iron sponge, which had been manufactured specially for use in the process, could be satisfactorily replaced by wrought- or cast-iron scraps. The chief requirements as regards the character of the iron seem to be: 1. That the pieces should not be so large as to cause injury to the sides of the revolving cylinder by their constant motion; 2. That sharp edges, such as occur in borings, should be avoided.

Wrought-iron is better than cast-iron. Experience has shown that the punchings from rivet-holes in boiler-plates are best suited to the process, and these are now commonly used. In all cases, pieces not exceeding $\frac{3}{8}$ to $\frac{1}{2}$ inch in diameter are preferred. If sharp-edged turnings are used, the ferric oxide produced appears in the form of extremely fine particles instead of the larger flakes which result from pieces of iron with rounded surfaces. The finer particles are like the clay which floats in the river water, in that they do not subside and cannot be separated by filtration. The formation of large and rapidly-subsiding flakes of oxide of iron has proved a matter of much importance in conducting the process.

In order to promote the agitation of the iron with the water as it streams through the cylinder, curved shelves are fixed to the interior surface of the walls.

By the revolution of the cylinder the iron scraps are carried up and dropped in a continual shower through the water. As the water enters the cylinder it flows against a circular plate, placed vertically, by which it is deflected radially towards the sides. In this way the formation of a current along the axis of the cylinder is prevented.

The largest size of purifier in use consists of a cylinder of 3000 gallons capacity. An apparatus of such dimensions, charged with 2½ tons of iron punchings and rotated by an engine of somewhat less than one-horse power will purify about 1,000,000 gallons of water in twenty-four hours. At Antwerp four of these machines are in use, with a daily yield of three and one-half to four million gallons.

The actual consumption of iron by solution in the water amounts to about 15 pounds for every million gallons purified.

Settling reservoirs are used at Antwerp for the deposition of the oxide of iron before filtering.

Experiments in Allegheny have shown that, by a system of flumes, the water, as it flows from the purifier, can be made to deposit the greater part of its sediment, and thus the time required for the process somewhat shortened.

In the construction of filter-beds it has been the practice to allow one square foot of filter-surface for 80 gallons of purified water filtered in twenty-four hours. This rate of filtration has been greatly exceeded in the trials in Allegheny.

That iron in the act of rusting should have the power to purify water seems at first sight improbable. The reactions involved in the process are, however, not difficult of explanation.

Iron placed in still water is soon coated with a film of oxide, but the oxidation is extremely slow. If removed by friction the coating is quickly renewed. The action seems to be due to the small quantity of carbonic acid present in solution in all water.

Impregnation of water by carbonic acid gas increases the corrosive effect. Impure waters, by reason of the greater amount

of carbonic acid which they contain, possess greater solvent power, and, therefore, in the case of fluctuations in the purity of water the action will he, to a certain extent, self-regulating. The corrosion of iron by river water, when the oxide film is being continuously removed, is very rapid and is even comparable as regards intensity with the effects produced by dilute mineral acids. As a result of this corrosion the water contains ferrous oxide in a condition which may be described as intermediate between solution and suspension, and is of a dark brown color. On exposure to air the ferrous oxide is rapidly changed to ferric oxide, which, being insoluble in water, is precipitated, carrying with it the floating sediment, so that a verry muddy water is completely clarified. Cchemical examination shows that the water after subsidence of the iron oxide, has lost the greater part of its nitrogenous impurities.

Simultaneously with the removal of organic matters, the bacteria are so far reduced in number that the water may be considered as almost or completely sterile. The purification of the water from organic matters is supposed by the inventors of the process to be partly due to oxidation by ferric oxide, and to illustrate they cite the case of the corrosion of linen by the rusting of an iron nail. This action they consider to be supplemented by coagulation. The disappearance of bacteria is probably due to two causes: 1. To the formation of ferrous oxide in solution which is destructive to the life of these organisms; 2. To the removal from the water of the organic matter by which they are deprived of their food.

The following report upon the process as applied to the Antwerp water was made by Prof. Blas, of the University of Louvain:

	Average of weekly trials during 1889. (Parts per million.)	
	Unpurified.	Purified.
Total solids,	250	200
Free ammonia,	0.30	0.01
Albuminoid ammonia,	0.30	0.10
Oxygen consumed,	80	40

The original water was usually muddy and opaque when examined through a depth of two feet.

The purified water was clear and brilliant. The river water contained about 50,000 bacteria in a cubic centimeter.

After purification the number was reduced to from 2 to 20.

It is stated in the report that "in no case has the water of the Antwerp supply disclosed under analysis suspicious or pathogenic bacteria, such as those of typhoid fever, for which search has been made with special attention."

The process was tried on the Delaware river at Tacony, above Philadelphia, and afterwards at Belmont, on the Schuylkill, in 1891.

Analyses made by Drs. Leffman and Beam gave the following results in the case of Schuylkill water:

	Means of Seven Examinations. (Parts per million.)	
	Unpurified.	Purified.
Free ammonia, ...	0.014	0.01
Albuminoid ammonia, . . .	0.116	0.046
Nitrogen in nitrites, . . .	0.00038	0.00025
Nitrogen in nitrates, . . .	0.61	0.57
Oxygen consumed, . . .	1.165	0.617

The muddy and discolored water of the Schuylkill was completely clarified. The bacteria were reduced in number from 13,000 (mean of seven trials) to 48 (mean of 10).

Recently the process has been formally approved for purifying the water for a large portion of the suburbs of Paris. It will there be used according to authentic reports for the treatment of the waters supplied to a population of 800,000.

It is being tried experimentally at Poughkeepsie, on the Hudson.

About the beginning of February a small experimental plant was set up in the pumping station of the Allegheny water works. The method of application of the iron was considerably modified.

Instead of a single revolving cylinder four cylinders were joined together and rotated about a common axis. This system of cylinders was partly submerged under water in a tank.

The walls of the cylinders were covered with small perforations (about $\frac{1}{8}$ inch in diameter). As the cylinders revolve, each carries down with it a quantity of air received through the perforations in its sides, and at every turn a fresh supply of air enters. The water passes into the tank at one end and out at the other end. It finds access to the charge of iron in the cylinder through its perforated sides, and circulates freely between the tank and the interior of the cylinders, instead of being delivered directly into the interior of the cylinders.

In this form of purifier aëration is much more complete, and the iron is oxidized directly to ferric oxide, so that the water at once acquires a reddish-brown color.

No settling reservoir was used, but an opportunity was afforded the water on its escape from the tank to deposit its iron oxide by passing through a system of flumes. In these the coarser sediment was collected, so that very little iron oxide was carried to the filter bed. Three filters were used in completing the process. These were placed one above another, so that the water flowed through them all successively. In the first trials the filter beds were composed of sand taken from the Allegheny river. The three filters were alike, being of sand, 4 inches deep, spread upon a layer of quartz pebbles.

In the later experiments a much finer sand was used, although little or no difference could be observed in the character of the filtrate.

The time of treatment was very short, an interval of a few minutes only having elapsed between the entrance of the water into the purifier and its passage through the filters into the reservoir.

In the following table of analyses the results of the process are shown (page 157).

Columns I.—Hydrant water.

Columns II.—Water which had passed the iron purifier and then been kept standing twenty-four hours for the deposition of the ferric oxide, but not filtered.

Columns III.—Water which had been purified and filtered through sand.

Parts per Million.

	Feb. 11.			Feb. 22.			March 1.			March 3.			March 8.		
	I.	II.	III.	I.	II.	III.	I.	II.	III.	I.	II.	III.	I.	II.	III.
	Hydrant.	Decanted.	Filtered.	Hydrant.	Decanted.	Filtered.	Hydrant.	Decanted.	Filtered.	Hydrant.	Decanted.	Filtered.	Hydrant.	Decanted.	Filtered.
Total solids	168.0	65.7	78.5	109	60	70	133	64	74	128	57	56	121	64	63
Free ammonia	0.04	0.03	0.03	0.02	0.03	0.04	0.03	0.02	0.03	0.03	0.02	0.02	0.03	0.03	0.03
Albuminoid ammonia	0.36	0.08	0.05	0.38	0.04	0.04	0.22	0.04	0.06	0.20	0.05	0.07	0.46	0.04	0.07
Nitrogen in nitrates	0.01	0.005	0.005	0.3	0.04	0.03	0.7	0.3	0.3	1.1	0.7	0.7	1.4	0.7	0.6
Nitrogen in nitrites	trace	trace	trace	trace	trace	trace	trace	trace	trace	trace	trace	trace	trace	trace	trace
Oxygen consumed on 15 minutes' boiling,	9.36	6.86	4.36	6.56	1.63	1.8	6.2	2.3	2.7	5.3	2.0	2.5	6.0	1.0	1.4
Hardness	40	40	40	48	47	47	33	33	33	43	43.5	43.5	40	39	3.9

The water of the Allegheny, when the trials were being made, was, in most cases, very muddy and impure.

As a result of the process, the water was thoroughly clarified, exhibiting in some instances a degree of clearness approaching that of distilled water. The analyses show a great improvement as regards organic matters.

The nitrates are, to a slight extent, reduced, as they apparently take part in the oxidation of the iron. Although the rate of filtration of the water after passing the iron purifier varied from 76 to 480 gallons per square foot of sand surface per twenty-four hours, the filters had not been overtaxed.

In several of the later trials, when the apparatus was in excellent running order, the water which had been purified and allowed to stand twenty-four hours in order to deposit its sediment contained less of organic matter than that which had been purified and subsequently filtered. This statement is explained by the fact that during the slow subsidence of the precipitate the ferric hydrate is longer in contact with the organic matters of the water, and a more complete coagulation occurs.

In order to gain further information upon the nature of the action exerted by the iron purifier upon organic matter, the following experiments were tried:

A liter jar of purified water, still containing its ferric oxide sediment, was allowed to stand twenty-four hours. The clear water was syphoned off. A determination of ammonia was then made in the residual sediment with the following result:

	Milligrams.			
	Free Ammonia.		Albuminoid Ammonia.	
	Feb. 11.	Feb. 27.	Feb. 11.	Feb. 27.
1 liter hydrant water.....	0.02	0.02	0.36	1.19
Sediment of ferric oxide, from 1 liter purified water.....	0.01	0.005	0.33	0.17

The organic nitrogen seems, therefore, to be almost wholly

transferred to the precipitated ferric oxide, and is not destroyed. Another portion of the sediment, on being boiled with 1 per cent. sodium carbonate solution, yielded an insignificant trace of ammonia, so that the precipitated ferric oxide does not contain any ammonia in combination.

Similar trials were made with precipitated ferric oxide from the purifier after the water had been kept standing for from two to four weeks. The results were practically the same.

It was also found that after standing one month, the clear water syphoned off from a depth close to the surface of the precipitate in the jar, was as free from nitrogenous impurity as that at the surface, and fully equal to water which had just been subjected to the process.

It appears, therefore, that the organic matter precipitated with the ferric oxide exists in an extremely stable form of combination, and is not prone to undergo any putrefactive changes, even after a long period of time, and at a moderately high temperature. Much has been said of an electrolytic method for purifying water. An elaborate process has been described by Webster (*J. Soc. Chem. Industry*, 1890, p. 1093.) By means of huge iron electrodes ferric oxide is produced, which floating off in the water coagulates and precipitates the organic matters. It is apparently an efficient but very expensive method of making *ferric hydrate* and utilizing it as as a coagulant.

The water of the Allegheny River contains organic matter in an extremely coagulable form. It also contains a coagulant in the suspended clay, and if given an opportunity to subside, this clay carries down with it the greater part of the organic matters. Chemical tests of water clarified by subsidence, and also of the precipitated sediment, show that the organic matter and the sediment are always intimately associated. It may be asserted as a general proposition that the greater the amount of suspended clay, the greater the proportion of organic matter in the water. Whatever tends to remove the clay, will correspondingly reduce the organic matter. The greater the rainfall, the deeper and more muddy the river, the less pure will be the water. Each particle of sediment carrying its minute load of organic matter is con-

tinually tending onward towards the sea, being either pushed along at bottom by a feeble current, or carried in suspension by a stronger one. Much of the organic nitrogen entering the Allegheny in Pennsylvania, is no doubt making its way in this manner to the Gulf. The most muddy and impure river water is often free from nitrates. This may be due to the stability of the precipitated compound of organic with inorganic matter in which the nitrogen is protected from oxidation by its union with the clay. The water of the river might be described as being itself very nearly pure but holding in suspension considerable quantities of objectionable organic matters which have already undergone partial coagulation. By means of a powerful coagulant this process may be completed and the organic matter precipitated. The recent experiments in Allegheny seem to show that iron oxide produced in the water by the direct oxidation of iron possesses sufficient coagulating power to effectually clarify our river water and to render it suitable for household use.

Discussion.

Mr. Crabtree: As to the rate of filtration,—you said about 480 gallons; was that per square foot?

Dr. Phillips: Per square foot of surface? Yes, during twenty-four hours.

Mr. Crabtree: How long do these filters last?

Dr. Phillips: It seems to depend on the purity of the water. Where the water is very impure, more oxide of iron is taken up. In that case a little more iron is carried into the filters. They are cleaned out after a few weeks. Very little oxide is allowed to get into them. I believe that in most plants used abroad settling reservoirs are the rule. The experiment is being tried of using the apparatus in St. Louis without filtration, and it seems to be the expectation of the owners of these patents to be able to so use the process generally. They think that the very muddy waters of the Mississippi Valley may be more readily cleared of organic matter, by the oxide of iron, than the tidal waters in which the organic matter preponderates over the clay.

MR. T. P. ROBERTS: I would like to ask Mr. Phillips what the velocity of the water was as it flowed through the apparatus?

DR. PHILLIPS: The apparatus used in Allegheny was a very small one. The time in passing through the tank was estimated to be between 3½ and 5 minutes. It is never necessary for the water to be more than 5 minutes, and it must be 3½ in contact with the iron.

MR. ROBERTS: Was there one outlet to the flumes or more than one?

DR. PHILLIPS: There was one outlet. The water was flowing at a rate that was constantly varying; the slowest rate was about 75 gallons; it ran up to 480, and probably could have been carried still further, but it seemed to be the idea that it would never be necessary to run at a higher rate than that, and so they only made one experiment, at the rate of 480 gallons per day per square foot.

MR. CLARK: As I understand it, that was a day of ten hours?

DR. PHILLIPS: No, this estimate was for 24 hours. It was 35 gallons per hour with filter surface of 1¾ square feet.

MR. CRABTREE: You said something about the arrangement of the tanks containing the iron. The water was not run through the tanks directly but indirectly. How were the cylinders containing the iron arranged?

DR. PHILLIPS: I can represent that, perhaps, on the board (makes sketch on the blackboard). Four cylinders, and this is the axis about which they revolve. The water in the tank was only so deep that the uppermost cylinder was, to a considerable extent, out of water; there were perforations all around the sides of the cylinders—great numbers of them—and as the cylinder came up, the water, of course, ran out and the air came in. This air was carried down and bubbled up through the water.

MR. CRABTREE: The four cylinders rotated about the centre?

DR. PHILLIPS: (Indicating on sketch) This was the centre about which they rotated. In the new plans which they expect to use, it seems to be the object to secure more perfect aeration by having a great number of cylinders. The process is totally different, however, when the water simply circulates through the sides

of the cylinder. There is a different effect produced. Instead of the iron being converted first into the dark-colored ferrous oxide it is turned directly into the red ferric oxide. I think it quite possible that that may have some effect on the microbes in the water. It is hardly to be expected that where water is charged directly with ferric oxide that microbes will be destroyed as perfectly as where the iron is first converted to ferrous oxide and afterwards oxidized to ferric oxide. It seems to be well established that the most poisonous form of iron for these organisms is ferrous oxide. It is much more destructive than ferric oxide. The plant is so situated in the water works that tests of the bacteria could not very well be made. The heavy machinery causes such circulation of the air that samples could hardly have been taken sufficiently free from bacteria derived from the air to make a perfectly reliable test.

MR. HANDY: Can you give us any idea of the cost of the plant that is working in Antwerp, for instance?

DR. PHILLIPS: According to the published statements of the company, it is said that one of these largest purifiers which can be used to treat a million gallons per day, from 900,000 to 1,000,000 gallons, according to condition of the water, costs about £5000 sterling, and that the total cost of running is but 4*s.* per million gallons. I believe that they estimate a somewhat higher rate in case it should be used in this country. Aside from Poughkeepsie, St. Louis and Philadelphia, on a small scale, it has, I believe, been finally introduced nowhere else in this country as yet. It has been said that it will cost about two dollars here, or twice as much as in Holland and Belgium. But it will be well to await the final results of the Poughkeepsie experiments before attempting an estimate of the cost of the process should it be applied to the water of the Allegheny river.

The larger the quantity the less the rate of cost. They use steam-power in the case of the smaller plants, but, it is said, that the water delivered from a purifier can be made to supply the power for the rotation of the cylinders—and it is made automatic, so that as soon as the water is turned into the cylinders it causes the cylinders to rotate by turning a turbine.

MR. K. F. STAHL: It seems to me that the cost of renewals would be rather high. The iron cylinders would suffer as much loss as the scrap would, and would require renewal pretty nearly as often.

DR. PHILLIPS: The iron in the cylinder must oxidize just as fast as the punchings. There is some iron carried off as metallic iron. That can always be shown. The iron oxide, as it subsides, will produce a very slight effervescence if placed in dilute acid, so there is a minute quantity of iron rubbed off and carried along as metallic iron.

MR. K. F. STAHL: I suppose the cylinder could be made of cast-iron, and would not corrode as much as the punchings. You said that cast-iron did not oxidize as rapidly as either wrought-iron punchings or soft steel.

DR. PHILLIPS: Cast-iron rusts fast enough, only the difficulty seems to be that it is liable to produce a very fine form of oxide of iron, which does not subside as well; this is, sometimes, a very serious difficulty. Sharp-edged turnings produce that effect and the effect is absolutely disastrous to the process.

Adjourned.

J. O. HANDY,
Secretary C. S.

MAY 16TH, 1893.

The regular meeting of the Society was held in the lecture room of the Academy of Science and Art, on May 16th, 1893. Mr. M. J. Becker, President, in the Chair. Twenty-four members were present. The minutes of the last meeting were read, corrected and approved.

The Board of Direction reported that Mr. Harry J. Lewis had been appointed Assistant Secretary.

Messrs. G. S. Davison and W. G. Wilkins having been appointed tellers, the following applicants were elected to membership: Morton S. Byers, Carl Lundin, James W. Shields, George C. Urquart.

Mr. H. J. Lewis, Chairman of Library Committee, reported that since the last annual meeting 108 volumes and pamphlets had been received. On motion of Mr. G. Kaufman the report of the Committee was accepted.

The report of the Reception Committee in regard to obtaining a badge for the members of the Society was then received, and on motion of Mr. E. Swensson the Committee was empowered to request all members to submit their views in regard to design, material, etc.

Mr. Thos. P. Roberts, for the Committee on Conference with the Chamber of Commerce, on entertaining visiting engineers, reported that a guide book would be published by the Chamber of Commerce for immediate distribution; and that in this book a reference was made to the rooms of this Society being open to visiting engineers.

A letter from Mr. E. D. Corthell, chairman of Committee of Engineering Societies, dated Chicago, May 11th, was then read. It outlined the excursion of the French engineers who will be due in Pittsburg about September 21st.

After full discussion, on motion of Mr. T. P. Roberts, seconded by Mr. A. E. Hunt, it was ordered that the Committee of Reception of Guests shall have the right to increase its membership officially.

No paper was read.

Adjourned.

R. N. Clark,
Secretary.

WATER SUPPLY OF THE OLIVER COKE WORKS.

BY G. S. DAVISON.

(Read April 14th, 1893.)

The great development of the many natural gas fields within a radius of fifty miles of Pittsburg, and the widespread desire upon the part of all to have the gas within easy reach has made Western Pennsylvania a network of iron pipes.

The failure of the supply of gas has rendered many of these pipe lines, existing through the country districts, valueless. But some are now being taken up and used again to advantage for water lines. It is a portion of one of these former gas lines that is now used for a water line that forms the subject of this paper. The line extended from the Grapeville wells to Connellsville and thence across the Youghiogheny river and to Uniontown. It was owned by the Southwest Natural Gas Co.; they conceived the idea that this abandoned gas line could be used as a water line from the Youghiogheny river south to the many coke plants that during portions of the year were short of water.

A year ago it became necessary to procure a water supply for the Oliver Coke Works. These works consist of No. 1 Plant of 300 ovens, which are now in operation, and in No. 2 Plant, which is in course of construction, and which, when finished, will make a total of 600 ovens. The works are situated at Redstone Junction, one mile from Uniontown; and within 10 miles of the southern end of the Connellsville region.

As one of the first requisites of a good coke is freedom from sulphur it naturally follows that the water used in quenching the coke should also be free from sulphuric acid. To cool one oven of coke it takes about 600 gallons of water, so that for the 660 ovens, one-half of which are drawn each day, when the plant is in full operation, would require 200,000 gallons; or for boilers and domestic supply added, about 300,000 gallons. This large supply must necessarily be derived from a source both pure and unfailing. The natural source was Redstone Creek, which separates the two plants and runs within 200 yards of each, but unfortunately its water is contaminated with the drainage of so many other plants that its use could not be considered. Aside from this stream there were no others of sufficient magnitude nearer than the Youghiogheny river, and during the consideration of such an important undertaking as bringing the water from such a long distance, the water as pumped from the mine was used for cooling the coke.

A large saving in first cost could naturally be made in the use of the Southwest Natural Gas Company's line above referred to

in bringing water to these works from the river, and it became purely a question of the physical condition of the line. Upon examination the following facts were developed: The line crossed the river just below Connellsville and extended in a very direct line to Uniontown, passing within a quarter of a mile of the Oliver Coke Plant. The distance along the line to opposite the latter point is 52,000 feet. The summit of the line is 22,400 feet from the river and 440 feet above the same, and 237 feet higher than the Oliver Plant. Of this distance the first two miles, or about 10,500 feet, is 10-inch pipe. The remainder of the line is 8 inch. In the gravity part of the line beyond the summit, the least rate of grade occurs between two summits that are 21,000 feet apart, and at a difference in elevation of 129 feet, making the grade between them 0.60 per cent. The water in this portion could acquire by gravity a velocity of about 3.3 feet per second, yielding a quantity of water in 24 hours of about 750,000 gallons, an amount two and a half times above what would be required at the Oliver Plant; or sufficient water could be delivered through an 8-inch pipe at the above velocity in 10 hours to supply the plant. Returning to the pumping side of the summit, and applying the latter condition to the 8-inch pipe there, the velocity of 3.3 feet per second in the 8-inch line would necessitate a velocity of 2.11 feet per second in the 10-inch line. These velocities would create a dynamic head at the pumps at the river as follows: In 10,500 feet of 10-inch line, velocity 2.11 feet per second, 21 feet; in 11,900 lineal feet of 8-inch line, velocity 3.3 feet per second, 72 feet; total, 93 feet, or equal to a pressure of 40 pounds per square inch. The static head is 440 feet or 191 pounds per square inch. The total pressure at the pumps, and consequently the greatest possible pressure in the pipes at any point under the above condition, 231 pounds. This pressure would obtain through a small portion near the pumps only. On the gravity side of the summit, the greatest pressure in the pipe would be due to the static head at the lowest point, the outlet, which is 237 feet or 103 pounds pressure per square inch. From reliable sources it was found that the pipe before laying had been tested to a pressure of 750 pounds to the square inch, and that

during its use as a gas line it had frequently been subjected to a pressure exceeding 200 pounds without any show of leaky joints. With fuel cheap as it is in the vicinity of the proposed pumping plant, the height to which the water was to be pumped was not considered excessive from the point of cost of operating. The pressure to be used was less than the line was known to be able to sustain, with the possible exception of a portion next to the pumps, but as this portion was included in the proposed fourth change mentioned below, this point was considered of no consequence.

The changes suggested to make the line adapted to its new duty were as follows: 1st. A diversion of the line at the outlet to carry the water to the works, which necessitated the laying of a quarter of a mile of 8-inch pipe. 2d. The building of a reservoir at a point on the line 204 feet above the outlet at the coke works. 3d. The placing of air-valves at summits to provide against an accumulation of air. 4th. The diversion of the line at the river end so that pumps would be above the mouth of Dunbar creek. This would necessitate the laying of 10,100 feet of 10-inch line to take the place of 14,500 feet of the present line. By the last change the water would be taken out of the river at a point above Connellsville and above both Dunbar creek and Possum Run, the highest streams that drain the Connellsville coke region, and that empty into the Youghiogheny river. The change would lessen the height through which the water would be raised, and also do away with 4400 feet of 8-inch pipe and shorten the line that much between the pumps and summit.

The line was purchased; so was a pair of pumps, which were considered ample for present needs Change No. 1 was of course made. No. 2 will be carried out the coming summer by the building of a reservoir of a capacity of 3,600,000 gallons, on ground already purchased, the plans providing for a pair of these reservoirs.

The line was supplied with patent air-valves, but were not able to withstand the pressure in the line. In their places ordinary globe valves have been placed. The urgent necessity for the line did not allow time enough to make change No 4, and the pumps

were set up at the point where the old line crossed the river. There is no doubt but that the temporary manner in which connections were made with the mains at this point and the accumulation of air at points in the line where it should be relieved automatically, is at present interfering with the pumps. No extensive notes of the working of the pumps or line will be taken until the line and pumps are permanently arranged, at which time we hope to place the results before the Society. The only pressures so far noted were the static and dynamic pressures at the pumps. They were respectively 185 pounds and 225 pounds per square inch. The first agrees very well with the calculated static pressure of 191 pounds stated above, as the pumps are about 12 feet higher than the assumed height of water in the river in calculation. The dynamic head is also less by six pounds, but in this connection it might be remarked that the amount pumped at present per unit of time is much less than contemplated in the original calculations, and the actual dynamic head undoubtedly makes an unfavorable showing with that as calculated. As to the amount of water being delivered we have no accurate record, but would say that in addition to furnishing No. 1 plant, or about one-half the contemplated amount for the entire works, the Columbia Steel and Iron Company are also being supplied for their entire plant, as also the pumping station of the Wheeler mine.

The only failure of the line since it was put in operation occurred at a point within 2000 feet of the pumps. This was at a point where the line crossed the bed of Possum Run, the water of which contained sulphuric acid waters. The pipe was corroded, and it burst, and for twenty-four hours the pumps continued to swell the volume of water in Possum Run before the break was discovered.

In conclusion, I would say that the line is doing all that is required of it, and answers the purpose for which it was purchased. However, if the line had been built especially for a water line, a different route could have been selected, which would have had only one summit to cross instead of several as in the line as used.

DISCUSSION.

MR. ROBERTS: I would like to ask Mr. Davison—he stated, I believe, that the static pressure was about six pounds greater than as calculated. I would like to ask him if it is not very hard to account for the difference? I can hardly understand it.

MR. DAVISON: No: I said that the static pressure as taken at the pumps was six pounds less than we had calculated on originally, and the pressure at the pumps being six pounds less, was simply because the pumps had been placed 12 feet higher than the elevation as used in calculations.

MR. WILKINS: I would like to ask if there is any mechanical genius here who can get up an automatic air-valve that will work satisfactorily against a pressure of 225 pounds or more. We put Ludlow valves on, and every one of them broke except one at the summit, where the pressure was least.

MEETING OF THE CHEMICAL SECTION.

PITTSBURG, May 23D, 1893.

Mr. James Camp, temporary chairman; Mr. James O. Handy, secretary.

Twenty members were present.

A communication from Mr. William B. Phillips, of New York, recommending further consideration of the subject of segregation and its influence on the accuracy of sampling operations, was read.

Mr. A. T. Eastwick read a paper on "A Rapid Method for the Determination of Nickel in Steel." Discussion by Messrs. Camp and Handy.

The Secretary then read a paper by Mr. Philo Kemery, on the "Determination of Tungsten in Steel." Discussion ensued.

A general discussion on segregation and other subjects followed.

A RAPID METHOD FOR THE DETERMINATION OF NICKEL IN STEEL.

BY A. T. EASTWICK.

As a standard means for the separation of iron from nickel, the basic acetate method is probably the most reliable. But in the determination of nickel in so-called nickel-steel, involving the separation of such a large amount of iron from a small amount of nickel, the process is at best a long and troublesome one, to say nothing of the uncertainty of the result if the operation has to be at all "rushed," as is sometimes likely to be the case.

Having a number of nickel-steel analyses to make, I was impressed with the desirability of a more rapid and less laborious method for the separation of the two metals, and was led to make some trials in that direction. The fact that sulphide of nickel is less soluble in acid than is sulphide of iron caused me to belive that the nickel could be precipitated, leaving most of the iron in solution.

According to Fresenius, sulphide of nickel is insoluble in a neutral solution containing sufficient ammonium chloride; equally insoluble is it in a solution containing ammonium sulphate, and in this menstrum it remains insoluble even in the presence of a small amount of free sulphuric acid, if sufficient ammonium sulphate is present to nearly saturate the solution. By dissolving the steel in dilute sulphuric acid, adding ammonium sulphate and making the solution only slightly ammoniacal very little ferrous hydrate is precipitated. If then sulphuretted hydrogen is passed through the hot solution all the nickel and only a small amount of iron is precipitated as sulphide. Most of the latter redissolves after boiling the solution until neutral. A few cubic centimeters of very dilute sulphuric acid readily completes the solution of iron sulphide, leaving sulphide of nickel undissolved and containing very little iron.

After several modifications of the original trials the results obtained were sufficiently accurate and uniform to warrant the method being used as the following results will show :

Per cent. of Nickel obtained.		Per cent. of Ni found in the filtrate.	Per cent. of Iron carried down with Ni sulphide.
By acetate method.	By new method.		
3.06	3.02	.05	.55
	3.03	.03	.65
	3.05	Trace.	.60
	3.04	.04	.90
	3.04	.....	.75
	3.03	.....	.....
2.93	2.90	.....	.90
	2.92	.....	.80
	2.90	.....	.....
3.02	3.00	.....	.75
	2.99	.....	.....
	2.99	.....	.....

The amount of nickel remaining in the filtrate after precipitating with H_2S, and also the amount of iron carried down with the sulphide of nickel were determined in several cases as shown in the third and fourth column of figures.

The method in detail is as follows: Place one gramme of the drillings in a 5-ounce beaker, or its equivalent; add 50 c.c. of dilute sulphuric acid (20 per cent. acid), cover, heat until all the steel is dissolved, boil down to about 35 c.c. and cool rapidly in a cold water bath. Then carefully add ammonia, diluted with equal volume of water to prevent spattering, until very slightly ammoniacal. This point is indicated by the solution changing to a decidedly green color, and a slight coating of oxide of iron forming on the surface. It is important not to add any more ammonia than just enough to produce the green color, as the nickel is more rapidly precipitated when the solution is nearly neutral, and a large portion of the iron is precipitated with the nickel if the solution is more than slightly ammoniacal.

After the addition of the proper amount of ammonia, add 5 grammes of pure ammonium sulphate crystals, wash off the cover and sides of the beaker with a jet of water. Heat to boiling and pass a current of H_2S through the boiling solution for twenty minutes. Then discontinue the H_2S current, clean out the tube

and wash down the sides of the beaker, first with hot water and then, any sulphides still adhering, with a jet of hot 5 per cent. sulphuric acid, using as little of this as possible in so doing. Boil the solution again until the precipitate has a flocculent appearance and settles quickly when cooling. A few minutes boiling should produce this effect if the solution is in the proper condition. If, however, after several minutes boiling the precipitate fails to become flocculent and settle quickly, add a little more 5 per cent. sulphuric acid and boil again. Filter the precipitate on a small ribbed filter (an "S and S, No. 589" is very good for the purpose), wash well with hot ammonium sulphate water (5 grammes per 100 c.c.), and finally once with hot water. Transfer the precipitate and filter paper to a small beaker, about 1 ounce, and add about $\frac{1}{2}$ gramme of powdered potassium chlorate, mix well, breaking up the filter paper in so doing. Add 10 to 15 c.c. of strong hydrochloric acid, cover quickly and as soon as violent action ceases, stir well, add about 15 c.c. of hot water and heat nearly to boiling until all the sulphide of nickel is decomposed. Then filter and wash well with hot water. Precipitate the small amount of iron in the filtrate with excess of ammonia in the usual way and filter. Acidfy the filtrate with hydrochloric acid and pass a current of H_2S through it to precipitate any copper present; filter if necessary and boil free of H_2S. In the meantime dissolve the ferric hydrate obtained, in dilute hydrochloric acid, reprecipitate and filter. Combine the two filtrates and make the solution as nearly neutral as possible. Then heat to boiling and precipitate the nickel with yellow sulphide of ammonium, being careful to add only a very small excess. Two or three c.c. added gradually is generally sufficient.

When all the nickel is precipitated, filter on an ashless filter, wash well with boiling water, dry, ignite in a porcelain crucible to oxide and weigh as NiO; or dissolve the oxide in a little nitro-hydrochloric acid and water, make an ammoniacal sulphate solution and determine as metallic nickel by electrolysis.

A precaution that is necessary for the accuracy as well as the rapidity of the method is to keep the solution as concentrated as possible. In no stage of the operation should the volume exceed

150 cubic centimeters. With a little practice a determination can easily be completed in three to four hours if the nickel is weighed as oxide. If determined as metallic nickel a little more time is necessarily required.

Discussion.

Mr. James O. Handy: Working by Mr. Eastwick's method, we found 2.98 per cent. of nickel in his 3 per cent. nickel steel.

We experimented to ascertain how completely nickel could be separated from iron by three successive ammonia precipitations. Only 80 per cent. of the entire amount of nickel thus separated.

We found it necessary to avoid using much H_2SO_4 wash in Mr. Eastwick's method at the point where the nickel was being separated from the bulk of the iron.

Mr. James Camp considered an accurate method for nickel estimation to be very important on account of the increasing use of nickel steel.

DETERMINATION OF TUNGSTEN IN STEEL.

BY PHILO KEMERY.

Dissolve three or five grammes of drillings in a No. 4 evaporating dish with HNO_3 (1.20) and evaporate to dryness. When fumes cease to be given off, heat no longer than five minutes; otherwise tungstic acid may be rendered insoluble in ammonia. Allow to cool, take up with 20 c.c. of HCl and 50 c.c. of water, heat until all the iron is in solution; filter and wash with a hot 5 per cent. solution of HCl until the washings give no test for iron with potassium sulphocyanate. Treat the yellow WO_3 on the filter with strong ammonia, allow the solution to run into a weighed platinum crucible, evaporate to dryness on water-bath, ignite and weigh as WO_3 which contains 79.31 per cent. tungsten.

When silicon is also to be determined in tungsten steel, the above method is modified as follows: five grammes of steel are dissolved in 1.20 HNO_3; when solution is complete 10 c.c. H_2SO_4 are added, and contents evaporated until copious fumes of SO_3

are given off. Allow to cool, take up, filter, and wash the same as above (with hot 5 per cent. HCl). Ignite and weigh as $SiO_2 + WO_3$.

Treat the contents of the crucible with H_2SO_4 and HF, evaporate to dryness, ignite and weigh again. The differences between the two weights is the SiO_2. The remaining weight contains 79.31 per cent tungsten.

Both methods check closely with each other if manipulations are carefully done.

Secretary's Supplement.

Index to Recent Literature on Nickel Estimation.

Nickel in Steel.—A New Method of Estimating: abs. J. S. C. I., April 29, 1893, p. 377, original in Dingl. Polytech. Journal, 1892, p. 143.

Nickel.—Volatility in Presence of HCl: J. S. C. I., 1892, p. 243.

Nickel.—Analysis: J. S. C. I., 1892, p. 1035.

Nickel.—Separation from Iron, Cobalt, Manganese, Zinc, and Aluminium: C. N., 56, p. 3; 57, p. 125. J. A. A. C., 1888, p. 309; 1890, part I.

Nickel.—Analysis: S. H. Emmens: J. A. A. C., 1892, November.

Nickel and Copper in Ore and Furnace Products: D. H. Browne. J. A. A. C., April, 1892.

Nickel.—Separation of Iron from: J. A. A. C., 1891, July; 1887, III.

Abbreviations.

"J. S. C. I."—Journal of the Society of Chemical Industry.

"C. N."—Chemical News.

"J. A. A. C."—Journal of Analytical and Applied Chemistry.

Index to Recent Literature on Tungsten Estimation.

Tungsten.—Determination of: J. A. A. C., 1891, September.

Tungsten.—Separation from Tin: J. A. A. C., 1888, p. 190.

Tungsten in Iron and Steel: Blair's Chem. Anal. of Iron, p. 192; J. S. C. I., February 28, 1890.

Ferro-tungsten, Anal. of: J. S. C. I., 1891, p. 388.

Tungsten Ore Anal.: J. S. C. I., 1889, January 31st, p. 52.

Ferro-tungsten Analysis: C. N., February 16, 1892.

Tungsten.—Estimation in Metallic Tungsten: C. N., December 6, 1889.

General Discussion.

(*a*) *On Segregation.*

Mr. Murray gave instances of non-homogeneity of steel-rails.

Carbon in different parts of the head of the rail had varied from 0.47 per cent. to 0.77 per cent.

Phosphorus, in another rail had varied from 0.10 per cent. to 0.37 per cent.

Mr. Camp had had a small 4 x 4 x 12-inch ingot cast and cooled very quickly. The carbon was far from being evenly distributed.

Mr. Handy had drillings from a piece of steel $\frac{1}{4}$-inch by $1\frac{1}{2}$ inches in section, for phosphorus, and had found from .123 per cent. to .149 per cent. in drillings from adjacent holes.

(*b*) *On The Effect of Re-melting Cast-Iron in a Cupola Furnace.*

Mr. Handy thought that there would be a loss of silicon, a gain of sulphur and practically no change in the phosphorus content of pig-iron, thus re-melted.

Mr. Camp confirmed this and said that the gain of sulphur frequently amounted to .04 per cent.; the loss of silicon amounted in ordinary pig-iron to about 0.20 per cent. The manganese showed a slight loss.

The usual cupola charge was coke, 10 parts; limestone, 4 parts and pig-iron, 100 parts.

The coke used should be low in sulphur.

Ingot moulds for steel, are made of Bessemer iron of about 1.50 per cent. silicon, .05 per cent. sulphur, .100 per cent. phosphorus.

Ingot moulds should stand ninety or more heats without crack-

ing. When cracked they are broken up and used for steel making.

Scrap (iron and steel), added to the cupola-charge, makes the pig-iron melt sooner.

MR. HENRY T. WEED spoke of orange-colored cadmium sulphide which he had obtained.

Adjourned.

JAMES O. HANDY,
Secretary C. S.

INTERPRETATION OF RESULTS OF ANALYSES OF ALLEGHENY RIVER WATER AS SUPPLIED TO PITTSBURG.

BY JAMES O. HANDY.

(Read April 25th, 1893.)

WHEN a sewage-contaminated river is at its lowest stage, the percentage of sewage matters will be largest. Therefore, if the albuminoid ammonia found in Pittsburg water is wholly or largely due to sewage, we shall expect to find the highest proportion of such albuminoid in the autumn, when the river is at its lowest stage.

Prof. F. C. Phillips (*Proceedings E. S. of W. Pa.*, Feb. 19, 1884), records on the contrary, that the *lowest proportions of albuminoid ammonia were found when the river was lowest*, and that the amounts increased quite uniformly with the height of the river. These observations were made on Allegheny river water as supplied to Allegheny, in 1883, and point all the more clearly to the small proportion of the sewage matters in the water.

Records of subsequent analyses of Pittsburg water, which I have made, show likewise, less albuminoid ammonia when the river is lowest. My observations have been made on Allegheny river water as supplied to Pittsburg.

The Allegheny river was at a very low stage last fall, and analyses were made of the Pittsburg water, with the following results:

Analyses of Allegheny River Water, as Supplied to Pittsburg in September and October, 1892.

(Samples from Highland Reservoir.)

Date.	Height of River at Freeport, Pa., 26 miles above Pittsburg.	Parts per 100,000.		Chlorine.	Total Solids.
		Albuminoid Ammonia.	Free Ammonia.		
Sep. 30	+ 1.5′ (av. of Sep. 27–8–9).	.0160	.0007	1.40	10.10
Oct. 28	+ 0.7′ (av. of Oct. 25–6–7).	.0124	.0037	1.96	12.48

The amount of water passing Pittsburg at these times *exceeded* 635,000,000 gallons per day (observations by Mr. Joseph Lowry, engineer of the Pittsburg Water Works, in September, 1881, at Brilliant Station, showed a discharge of 635,000,000 gallons per day; the height of the river being 0.6 foot below S. S. gauge at Freeport. The stage of water at Pittsburg was the lowest, for fifty years).

The population of the drainage area above Pittsburg was, in 1890, something over 620,000. Of this number, about 135,000 live in towns of over 2000 inhabitants (see Table on p. 179.) From these data, it is thought safe to assume that the sewage of not over 50,000 people passes unoxidized, into the Allegheny river; the rest being deposited on the surface of the ground and purified by natural processes before it reaches the river.

Observations of the composition of sewage (Report Mass. State Board of Health, 1890), have shown that the average person contributes to sewage, every day:

	Pounds.
Free ammonia,	.015
Albuminoid ammonia,	.003
Chlorine,	.042

50,000 people would furnish, each day:

	Pounds.
Free ammonia,	750
Albuminoid ammonia,	150
Chlorine,	2100

The loss of all these materials (except the chlorine) by sedimentation, oxidation, absorption, etc., between their points of entrance and Pittsburg could not be less than 50 per cent. (The sewage of Worcester loses five-eighths of its albuminoid ammonia in flowing only 16 miles in the Blackstone river.— Report of Mass. State Board of Health, 1890).

The average distance of Johnstown, Oil City, Jamestown and Bradford, is over 160 miles from Pittsburg, and these towns doubtless contribute more than one-third of the sewage which finds its way into the Allegheny river.

Assume that one-half of the albuminous and other matters peculiar to the sewage of the 50,000 people before mentioned reaches Pittsburg. It is, at the lowest stage of the river, diffused through 635,000,000 gallons, or 5,289,550,000 pounds of water andwould furnish to this water only:

.0014 parts per 100,000 of albuminoid ammonia.
.007 parts per 100,000 of free ammonia.
.0196 parts per 100,000 of chlorine.

At the higher stages of the river, when the volume is at least 50 times as great and the velocity of the stream many times greater, the dilution would be more than 100 times as much. The amount of albuminoid ammonia due to sewage would then amount to only .000014 parts per 100,000. Calculating the mean discharge as 25 times greater than the low-water flow of the river, we see that at ordinary times, the amount of albuminoid ammonia due to sewage would not exceed .000056 parts per 100,000.

We are thus forced to conclude that the source of the greater part of the albuminous matter found in the Allegheny river water is, as in many other streams, the brown matter of dead leaves or other vegetation and the humus washed from the soil. This is confirmed by the color of the water.

Furthermore, in its composition, the water compares very favorably with the water supply of Boston and many other large cities. In order to show the remoteness of most of the sources of pollution, I give the following table:

DISTANCES FROM PITTSBURG OF THE PRINCIPAL SOURCES OF POLLUTION OF THE ALLEGHENY RIVER DRAINAGE-AREA.

	Distance by River. (Approximate.) Miles.	Population. (Census 1890.)	
Olean,	255	7,538	
Bradford,	230	10,514	
Salamanca,	220	3,692	
Jamestown,	200	16,038	
Corry,	170	5,677	
Warren,	167	4,322	
Titusville,	160	8,000	
Meadville,	153	9,500	
Oil City,	130	10,932	
Du Bois,	125	6,149	
Franklin,	124	6,220	
Clarion,	110	2,164	
Brookville,	91	2,478	
Johnstown,	90	21,805	
Total population of principal towns (more than) 90 miles distant,		115,029 =	87.4 per ct.
Average population and distance of each town,	159	8,216	
Kittaning,	46	3,095	
Apollo,	42	2,156	
Leechburg,	35	1,921	
Freeport,	26	1,637	12.6 "
Natrona,	24	2,137	
Tarentum,	22	4,627	
Kensington (estimated),	18	1,000	
Total,		131,602 =	100 "

From these considerations it is evident that the principal sources of pollution of the Allegheny river above Pittsburg are many

miles away, and that the polluting matters are largely diluted and probably, to some extent, oxidized before reaching the city. Furthermore, the chemical analyses of the water-supply, even when sewage is in highest proportion, compare very well with those of many other good waters.

These facts have been deemed sufficient heretofore to quiet complaints and allay suspicion of the water-supply.

When, however, we consider that it is probable that more than 99 per cent. of the albuminous matters found by chemical analysis have other than sewage origin, it becomes apparent how little significance we can attach to our determinations. Under conditions of such great dilution, chemical analyses, unless made regularly, are of little value.

As to the sources of pollution being distant, we know that mere æration does not suffice to purify water, and many hold that a stream once polluted never wholly frees itself from the polluting materials.

It is now generally believed that epidemics of cholera and typhoid fever are caused by infection of drinking water.

Neither chemical analysis nor bacteriological examinations, unless made with extraordinary frequency, can furnish us even an approximately complete record of the character of a water supply of such variable composition as is the Allegheny river.

It having been admitted that typhoid fever comes chiefly in the drinking water, it is interesting and instructive to study the records of that disease in Pittsburg and Allegheny and to compare them with those of other cities.

My data are derived from the Pittsburg and Allegheny Boards of Health and from "Typhoid Fever in Chicago," an article in the *Engineering News* of April 21, 1892, by W. T. Sedgwick and Allen Hazen.

I have consulted other works, among which are: *Water Supply*, William Ripley Nichols; Board of Health Reports, 1890, Mass.; "Purification of Drinking Water by Sand-Filtration," by W. T. Sedgwick (*Journal of New England W. W. Association*, vol. vii., 2); "Some Cases of Drinking Water and Disease," by W. P. Mason (*Journal of Franklin Institute*, November, 1891).

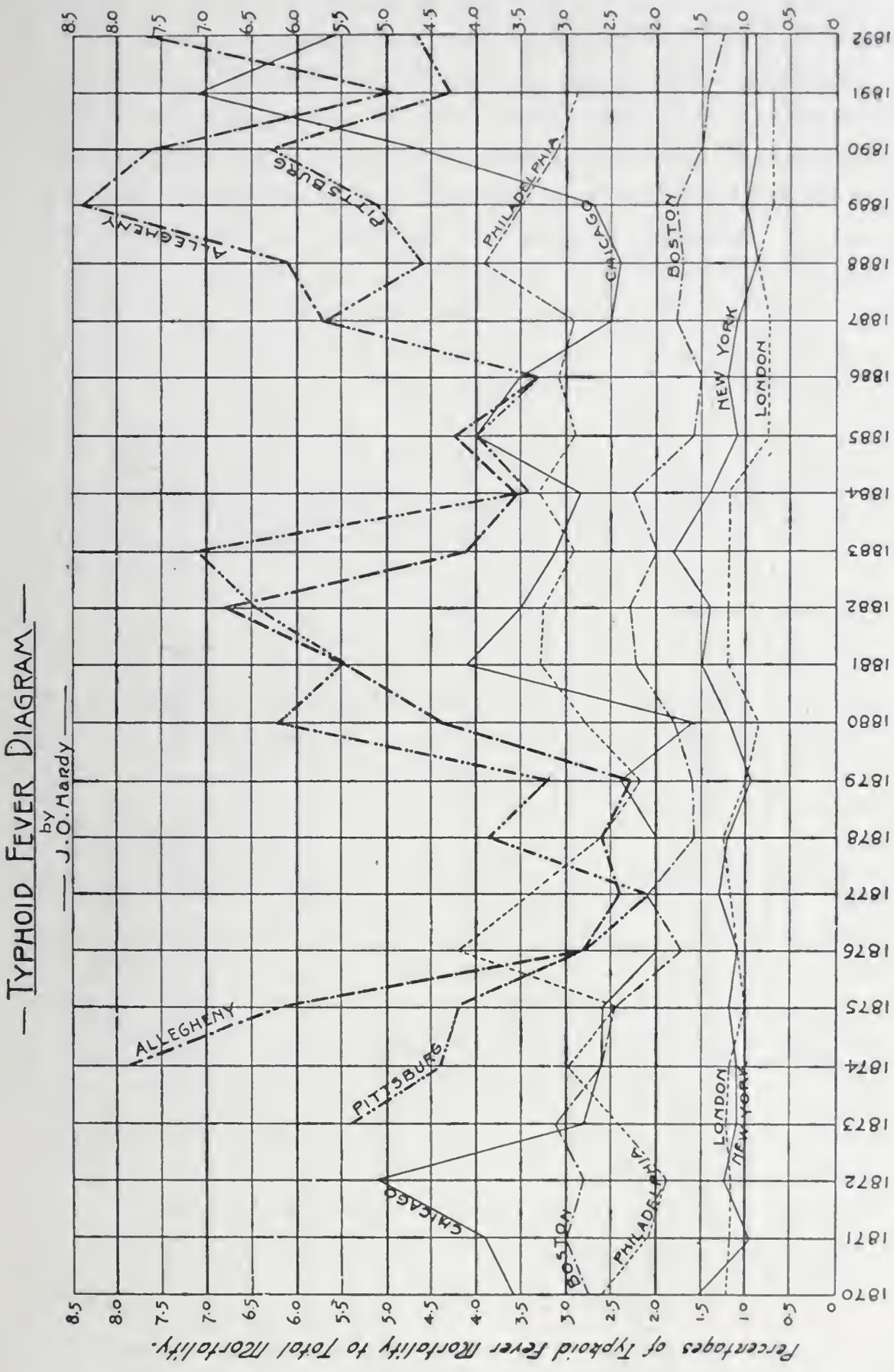

Pittsburg, Allegheny, Figures added by J. O. Handy. The remainder are from "Typhoid Fever in Chicago" (*Engineering News*, April 21, 1892).

Comments on the above diagram are almost unnecessary. Pittsburg's showing is disgraceful; that of Allegheny is worse.

Typhoid fever is considered by good authority to be a preventable disease. Drinking water artificially or naturally purified has been proven to be the preventive. London maintains its low typhoid death-rate by systematic sand-filtration of its drinking water. The diagram only shows the relation of typhoid to total mortality. It is instructive to see whether the high ratio is maintained when we compare the deaths from typhoid fever with the population during successive years. The following statistical able has been compiled with care.

DEATH RATE PER 10000 OF POPULATION FROM TYPHOID FEVER ETC.

YEAR	CHICAGO		PHILAD'L'PHIA		NEW YORK		PITTSBURG		ALLEGHENY		LONDON	
	ALL CAUSES	TYPHOID FEVER	ALL CAUSES	TYPHOID FEVER	ALL CAUSES	TYPHOID FEVER	ALL CAUSES	TYPHOID FEVER	ALL CAUSES	TYPHOID FEVER	ALL CAUSES	TYPHOID FEVER
1873	252	7.15	203	4.85	296	3.19	352	19.10			230	4.90
1874	205	5.34	197	5.95	279	2.96	313	13.80	236	18.7		
1875	194	5.09	223	5.25	294	3.60	255	10.80	131	8.1		
1876	204	4.00	217	9.22	274	3.02	233	6.70	161	4.4		
1877	182	3.61	188	6.37	236	3.10	258	5.30	181	4.4	225	3.30
1878	165	3.24	179	4.61	237	2.81	218	8.10	160	4.1		
1879	181	4.38	172	3.82	241	2.28	197	6.20	158	3.6		
1880	208	3.40	209	5.88	264	3.08	218	13.50	128	5.6		
1881	257	10.52	225	7.43	309	4.77	272	15.00	228	11.2		
1882	236	8.24	226	7.33	295	4.02	236	15.40	219	14.8	212	2.70
1883	199	6.22	221	6.38	257	4.72	183	10.30	182	7.4		
1884	198	5.62	215	7.13	257	3.49	198	6.80	180	5.0		
1885	187	7.46	225	6.42	254	2.88	194	7.70	182	7.6		
1886	195	6.86	206	6.36	258	2.99	204	6.70	177	5.7		
1887	203	5.01	218	6.25	261	2.82	219	12.50	194	11.0	198	1.50
1888	190	4.52	200	7.72	261	2.37	187	8.60	173	10.0		
1889	176	4.70	199	7.07	251	2.51	185	9.40	215	18.0		
1890	182	8.40	207	6.36	246	2.16	209	13.20	167	12.6	214	1.50
1891	231	16.64	214	6.27	257	2.26	232	10.00	167	8.3	214	1.40
1892	182	10.03	223		243	2.19	215	10.00	193	14.8		

The above Table has been compiled from W.T. Sedqwick's work (ENG. NEWS, APR 21, 1892), and from Health Reports, by J.O. Hardy. May-1893.

The total death-rate of Pittsburg has averaged 20 per cent. lower during the last ten years, than during the ten years from 1873 to 1883.

Typhoid fever has also averaged 20 per cent. lower.

In Allegheny the total death-rate averages for the same periods 4 per cent. higher, and the typhoid deaths are 20 per cent. higher.

They are still far in excess even of the somewhat notorious cities of Philadelphia and Chicago. New York and London put us wholly to shame, with their records of 2.26 and 1.40 typhoid fever deaths, respectively, per 10,000 of population, in 1891, when Pittsburg had 10.00, and has averaged 10.45 for the past 19 years.

London, with its sand-filters, has averaged only 1.76 for the last 10 years.

These figures show the position of Pittsburg and Allegheny very clearly, and point their own moral, viz., the improvement of the water supply.

JUNE 20TH, 1893.

THE regular meeting of the Society was held in the lecture room of the Academy of Science and Art, on June 20, 1893.

Mr. M. J. Becker, President, in the chair. Forty-seven members were present.

The president having made a statement that the meeting would be occupied by listening to the two papers which would be read, on motion of Mr. W. L. Scaife, the reading of the minutes was deferred.

Messrs. H. J. Lewis and W. G. Wilkins having been appointed tellers, the following applicants were elected to membership, by ballot: William A. Alexander, Curtis G. Hussey, Hugh A. Reed, and Herman Veeder.

The Reception Committee offered the following report in regard to a Badge for the Society:

PITTSBURG, PA., JUNE 19TH, 1893.

Mr. M. J. Becker, President Eng. Soc. of Western Penna.

SIR: Your committee appointed to consider and report upon a badge-button for the society, would respectfully submit here-

with the correspondence received by them relative thereto, and would recommend the adoption of the design submitted by Bailey, Banks & Biddle for an oxidized-silver button, costing $1.00 each for the first one hundred. Succeeding orders could, in all probability, be obtained at a less cost, and we would recommend that an arrangement be made with the makers of the button that none of them should be sold excepting through the society, thereby securing for the society the benefit of any reduction in succeeding orders.

As it will take from three to four weeks to complete the first one hundred, we would urge that in case this button is satisfactory to the society, that the order be placed at once, so that members may be able to obtain them previous to the opening of the Engineering Congress at Chicago.

Respectfully submitted,

GEORGE S. DAVISON,
Chairman, per H. J. Lewis.

On motion of Mr. G. Kaufman, the secretary was instructed to order one hundred oxidized silver buttons from Bailey, Banks & Biddle, of Philadelphia, and to follow out the requests of the committee in regard to the same.

GAS AND GAS-PRODUCERS.

BY WALTER E. KOCH.

FUEL-GAS, cheap and good, is the need of the present time. Natural gas is departing. Water-gas involves expensive apparatus, close attention, and, except for certain purposes, it does not appear to supply the wants of large mills, such as we have in Pittsburg. The old producer-gas, improved and modified by the proper use of steam-blast, seems to be the most satisfactory.

The closed-front producer now holds the field, and I think promises much in the future.

I have selected four types of producers for illustration.

Fig. I. represents the "Siemens" type, viz., a rectangular box with a sloping front, steam-jet, closed doors, and grate-bars.

Fig I

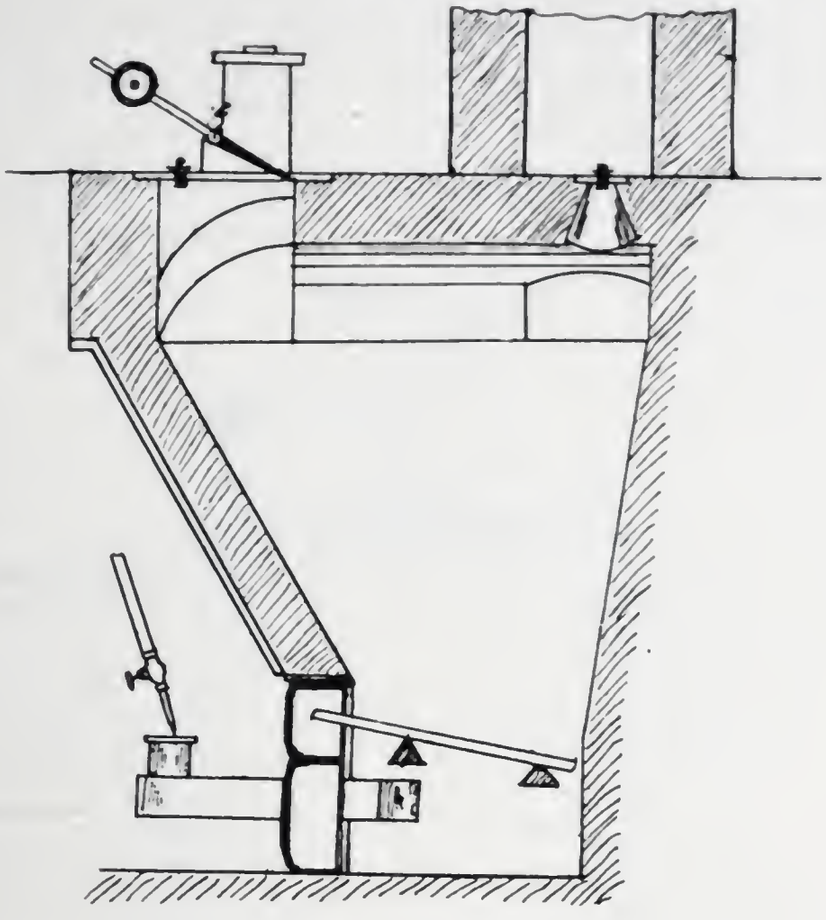

Fig II

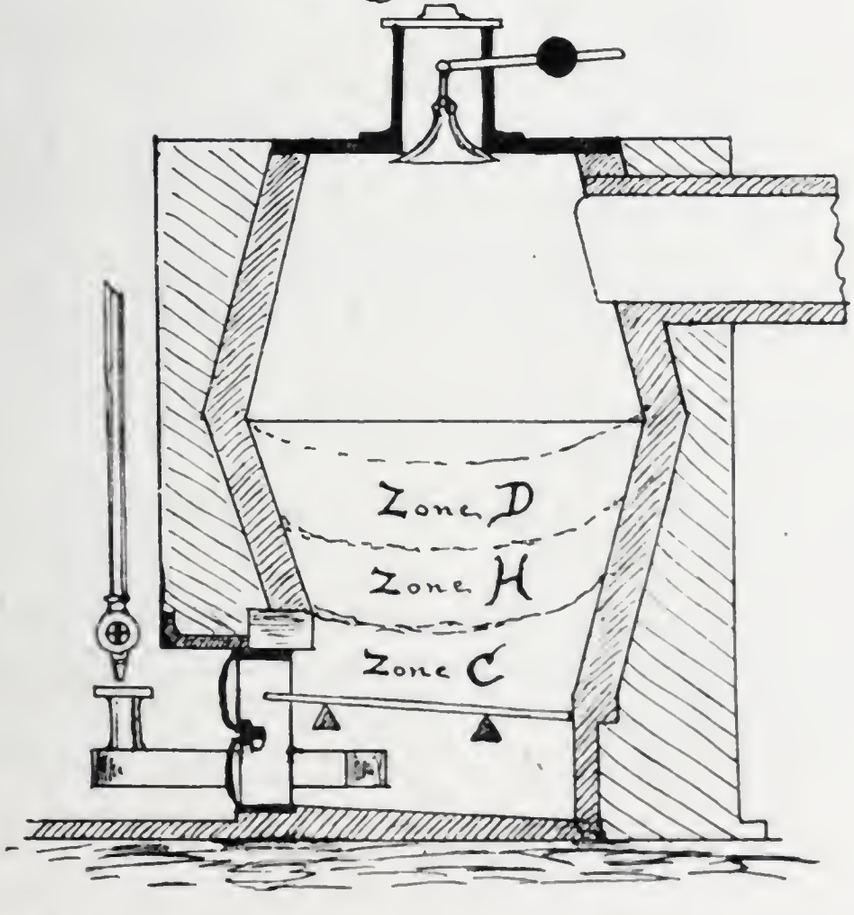

Fig. II. The circular type first introduced by Wilson, many years ago; the latest modification is called the "Wellman" type. It has a closed front, steam-blast, and may, or may not, have grate-bars.

Fig. III. is a modified circular producer, with closed doors, cen-

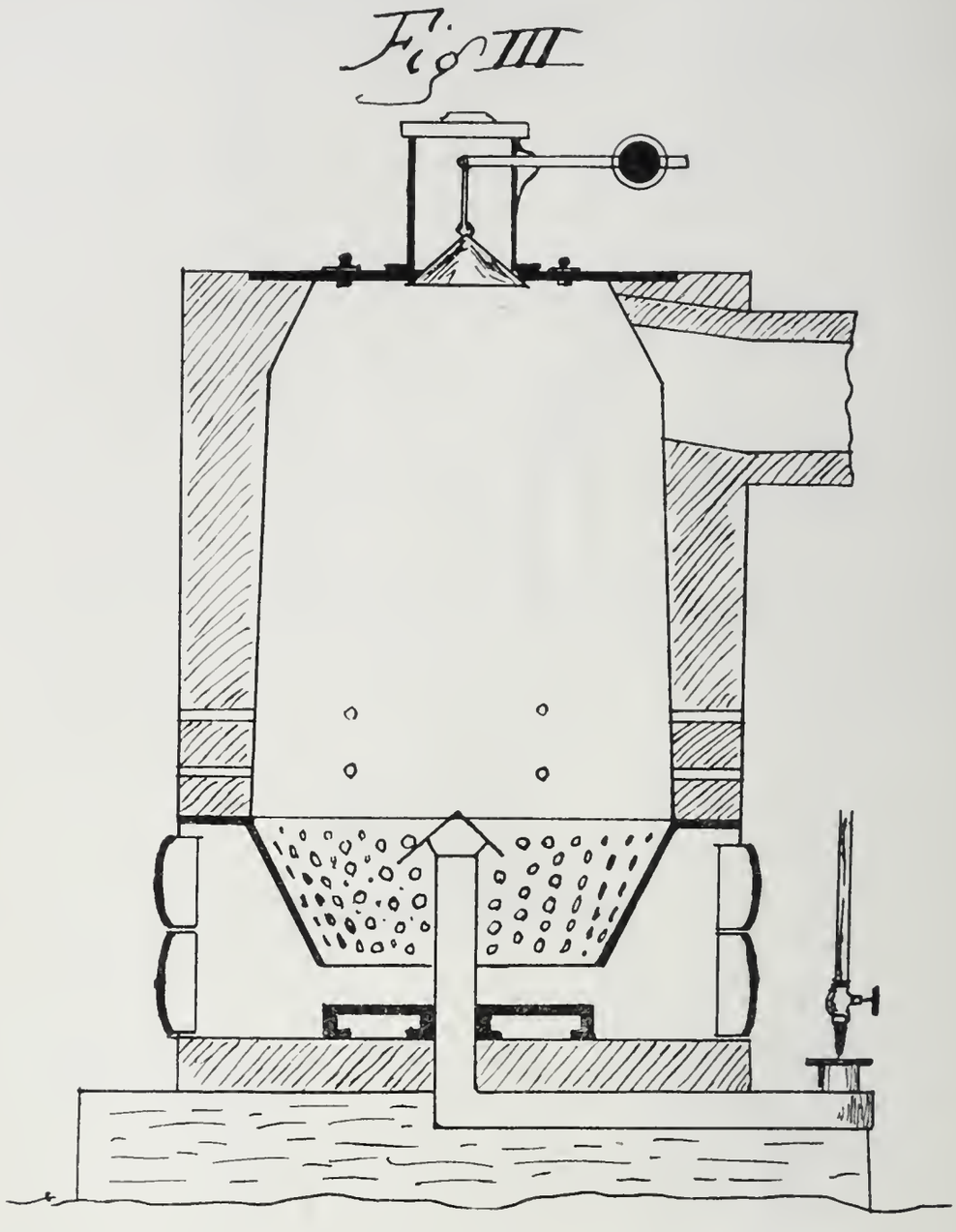

tral-blast, no grate-bars but a perforated circular casting in lieu thereof.

Fig. IV. is also a circular producer, with blast-pipes and tuyeres, like a small cupola; there are no grate-bars, but the ashes are melted and run out, limestone being used as a flux.

The modern tendency is to increase the size of the producer,

and no doubt this is an advantage, and it will grow and develop even as did the blast-furnace, which is merely a big gas-producer doing a little extra work.

A new producer of the circular type, called the "Dawson," with a water seal at the bottom instead of an ash-pit, is now being used in England.

Fig IV

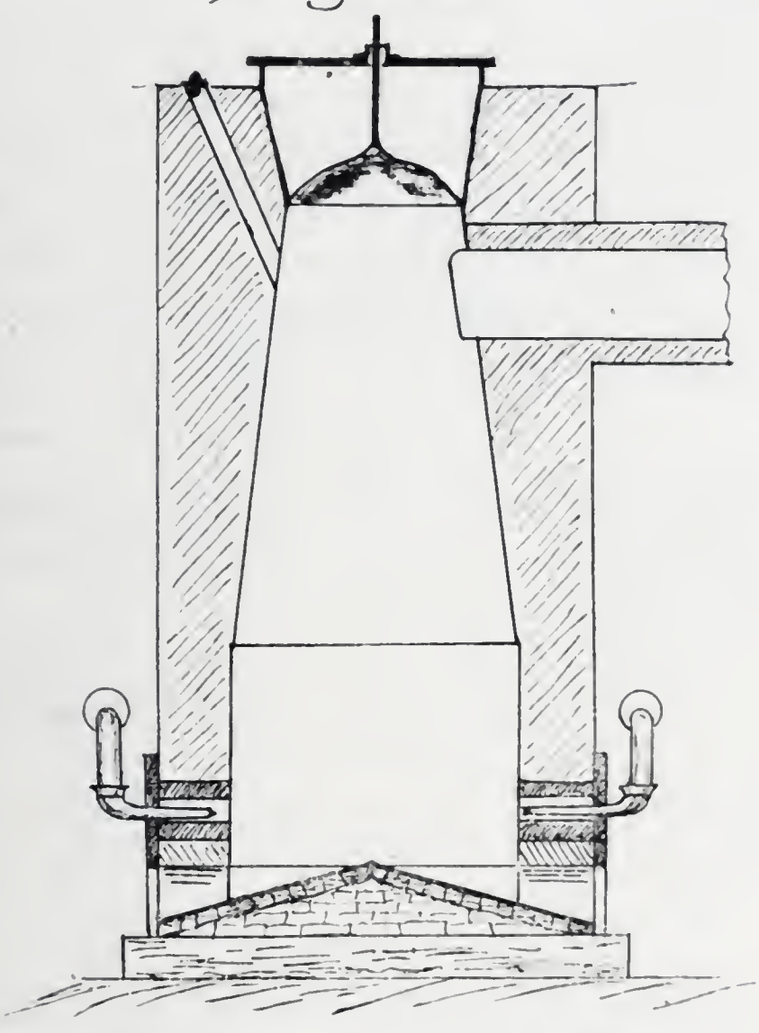

There is another common type of circular producer, with straight sides, with or without grate-bars, and with either concentric or eccentric steam-blast, which may be illustrated by Figs. II. and III. together.

Lastly, there are producers with special features, such as the "Taylor" revolving-bottom producer, and others, with mechanical arrangements, etc., which may or may not be improvements on the simpler types.

The modern producer, then, consists of a circular iron casing, lined with fire-brick, and the better the fire-brick the more economical the producer, as we do not wish to waste heat in melting poor fire-brick to make clinkers. It may or may not have grate-bars, but it should certainly have closed doors and steam-blast. The bell-hopper charging-gear gives a good distribution of fuel, and I certainly prefer the sloping sides, as in Fig. II., to any straight sides, as giving less chance to holes or spaces between the sides and the fuel.

The *modus operandi* seems simple enough, viz., light a fire, drop in coal, turn on the blast, poke sometimes, and remove ashes and clinkers at intervals; but the results are often vague and unsatisfactory, and the waste of fuel is greater than it should be. In an experience of over twenty years, I have made producer-gas from saw-dust, wood, turf, lignite, brown-coal, various refuse vegetable substances, and all kinds of coal and coke, but I think we have here as good fuel, if not better, than any I have come across in my travels and experiences.

By the courtesy of Messrs. Hunt & Clapp, of the Pittsburg Testing Laboratory, I am enabled to give you the average analysis of our Pittsburg coal:

	Average of Pittsburg coal. By weight.	First pool lump coal. By weight.
Water,	1.00	1.20
Volatile matter,	32.50	35.00
Fixed carbon,	56.00	57.60
Sulphur,	2.00	1.00
Ash,	8.50	2.50

One ton of average Pittsburg coal should give about 130,000 cubic feet of gas of about the following composition by volume:

	By volume.
Carbonic oxide,	26
Hydro-carbons,	2
Hydrogen,	11
Carbonic acid,	3
Nitrogen (by diff.),	58

The calorific value of 1 pound of average Pittsburg coal is

about 14,000 heat units, calculated at 62° F. and 760 mm. pressure, or about 7500 calories. The calorific value of the gas made from it in a closed-front producer with steam-blast, as Figs. II. and III., is about 9500 heat units, or 5000 calories, showing a loss in the producer of about one-third, or 33 per cent. It often happens that the CO_2 will rise over 4 per cent., while the hydrocarbons go below 2 per cent.; then, the loss will be greater. How can this loss be decreased? Let us consider the working of a gas-producer. As shown in Fig. II., a producer fuel-bed consists of three zones.

Fig II

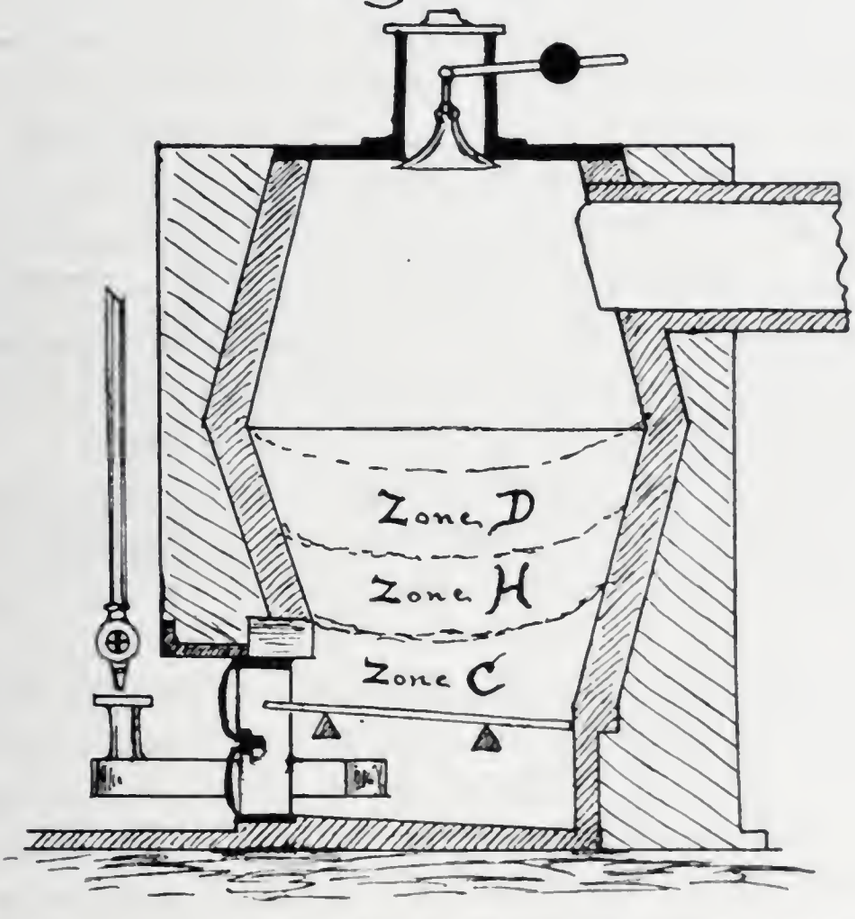

The lowest zone, marked C, is the zone of combustion; here the hot carbon of the coke is burnt to CO and CO_2, while the steam is superheated and commences to decompose into H and CO, and possibly CO_2 is also formed. The temperature here is about 2000° F., or 1100° C.

The middle zone, marked H, is where the steam is further split up into H and CO, and where the CO_2 is converted into CO — ($CO_2 + C = 2CO$); in this zone, then, there is large absorption

of heat, as it is the place of carbonization of CO_2, and the carbonization and dehydrogenation (if I may use the term) of steam. The temperature here must be kept above 1800° F., or 1000° C., in order that these reactions may go on. Temperature probably 1900° F. Now we come to the top zone, marked D, or the place of distillation, where the coal first strikes, and where the temperature is liable to vary from 700° F. to 1300° F. The products from the coal will vary here, even as the temperature, and it is just here our troubles arise.

If the temperature be kept high, the hydrocarbons formed by the distillation of the fresh coal will be broken up, the H set free, and soot deposited in the necks and flues; here is a fruitful source of waste; we do not want soot, etc., in our flues and valves, and the mere fact of burning-out flues being needful, is a confession of wasteful working. But suppose, on the other hand, we keep the top zone cool; we then get our hydrocarbons, and tar too, perhaps; we conduct them safely to the regenerators of the furnace, and we say, now we will get these 20,000 units of heat from them; but do we? I think not; they are surely decomposed in the regenerators, and we get that horrid clinging black deposit on our checkers which shortens the life of our furnace.

By experimenting with natural gas on hot surfaces, I have been able to imitate exactly the misfortunes of our checkers and furnace ports. It is a case of being "between the devil and the deep sea."

For my part, I think we should devote our energies to avoiding hydrocarbons as being too unstable and uncertain in their reactions at varying temperatures; for I am now firmly persuaded that they cause more trouble than they are worth; but on this point I should like to learn the opinions and experience of others. Carbonic oxide seems to me to be our best fuel, and next comes hydrogen, but too much of the latter is bad, as tending to make the flame in the heating or melting furnaces too short and locally intense, too much of a blowpipe flame. If we could make a producer-gas with about 35 per cent. carbonic oxide to 20 per cent. of hydrogen by volume, the rest being nitrogen, it would give us a clean gas, and soot would be less in the flues, and absent, I hope, in the regenerators of our furnaces. Such a gas could be piped around the

mill and used under boilers, etc.; for I am firmly persuaded that if hydrocarbons could be kept out, the gas could be piped through our mills to our very great advantage. All the experiments made by me along this line seem to point to the same conclusion.

There is one thing certain, and that is, that the middle zone, H, must be kept at a high temperature, high enough to carbonize CO_2, and split up the H_2O (steam) into H and CO, say 1800° F. Another cause of loss and waste seems to me to be in using too much and too wet steam in our producers. I think the steam should be dry, in moderate quantity, and at as low a pressure as possible. It should be arranged so that the steam supply can be quickly and easily regulated, both in volume and pressure.

Another point I have noticed is, that hydrocarbons in the producer-gas carry the sulphur over in a form liable to injure the charge in the furnace.

I think now I have made out my case against hydrocarbons, but I intend to pursue this question further as opportunities offer.

Of course, I am in favor of a deep fuel-bed, so as to insure the decomposition of all the steam, and keep down carbonic acid.

The question of exact high temperatures is a very difficult one. I have tried to measure temperatures in many ways—by using the Siemens electrical resistance pyrometer; by melting metals, such as silver, gold, copper, etc., and latterly by prisms. I have received measurements from Europe, made by the pyrometer telescope. I am still corresponding with experimenters on this subject, but am free to confess that the results are not satisfactory. It appears that the older observers rated temperatures far too high, and the text-books have just copied one another, and calculations have been based on these figures which must be gone over again.

In my calculations, I have used the lower range of temperatures, believing them to be nearer the truth.

Lastly, but most important of all, comes the question: What are we doing practically? How much fuel are we wasting?

The marine engineer has got down to about 1 pound of coal per indicated horse-power, while a "perfect" engine would consume about $\frac{6}{10}$ of 1 pound of coal. What is the metallurgical engineer doing?

Taking the specific heat of steel at .119, and the temperature of a reheating furnace at the melting-point of copper, say 2000° F., it should take 238 units of heat to heat 1 pound of steel to rolling-point. If 1 pound of Pittsburg coal gives us 14,000 heat-units, it should heat about 60 pounds of steel, or say we can only use 9500 heat-units (owing to our gas-producers), it should heat 40 pounds of steel. Now, what are our results?

I suppose raising a ton of steel-ingots from cold to rolling-point, with 200 pounds of coal, would be considered good practice, or about 1 pound of coal to 12 pounds of steel, instead of 1 pound of coal to 60 pounds of steel; a loss of 80 per cent. altogether—say 33 per cent. in the producer, and 47 per cent. in the furnace, etc. Faulty construction, bad heating, radiation, stoppages, loss up the chimney, etc., all help to swell the account against us.

Take iron, now; the specific heat is .114, and the welding-heat, to which it has to be raised to roll, is surely much higher than the rolling-heat of steel; I take it at 2500° F Therefore, it requires 285 units of heat to roll 1 pound of iron; therefore 1 pound of Pittsburg coal, giving 14,000 heat-units, should heat nearly 50 pounds of iron to rolling-heat. How near to this do we get? I remember when it used to take 1 pound of coal to 1 pound of iron. I supposed, now, if 1 pound of coal heated 9 pounds of iron, it would be good work. Of course, it will always take more fuel to heat 1 pound of iron than 1 pound of steel, on account of the higher temperature required, and also on account of the cinder contained in the iron absorbing an extra amount of heat—the specific heat of cinder being about .190.

Even in our best soaking-pit practice, where we only require to equalize, and but slightly raise, the temperature, we use 1 pound of coal to 50 pounds of steel, or, as much as should raise the ingot from cold to rolling-heat.

Taking the melting-point of Bessemer or open-hearth steel at about 2900° F., at which temperature it is also poured into the moulds, we ought to melt and pour 1 pound of steel (OH) with 345 heat-units, or, 1 pound of coal at 14,000 units should melt and pour about 40 pounds of steel, or, taking gas at 9500 units,

about 27 pounds of steel. The best practice I have heard of for scrap-charges is, 1 pound of coal to 5 pounds of steel; a common amount is 1 pound of coal to 4 pounds of steel. Of course, the ore and basic processes run higher—up to 1 pound of coal to 2 pounds of steel, on account of the slag. I was once told that 1 pound of coal had melted 7 pounds of steel; I merely repeat the statement.

Is not the waste simply awful; and should we not try to effect a saving?

Lastly, consider glass. The specific heat of glass is .197, and the melting-point about 2400° F. (according to the late Sir W. Siemens).

Glass, then, requires 472 units of heat to get it ready for the blower; therefore, 1 pound of coal at 14,000 units should melt about 30 pounds of glass, or 20 pounds taking gas at 9500 units. I should like to see the latest fuel-returns; I know the loss used to run up to 90 per cent., nearly. It appears, then, that we waste about 80 per cent. of our good coal; here, then, is a margin for inventors.

Of course, we cannot expect to gasify coal for nothing; there must be work done and heat-units expended in tearing asunder the various compounds and regrouping them, *e.g.*, $H_2O + C = H_2 + CO$; but, after ample allowance for all reactions, for radiation and chimney-draft, etc., there is still a loss of at least 60 per cent., which should not be. We ought to do better.

I think our engineers are devoting too much time to complicating our machinery; but, as fuel is the basis of all work, it will certainly pay to consider how we are "*not*" using it.

There is plenty of coal around Pittsburg that would give 15,000 heat-units, but some might run down as low as 12,000. When we buy coal, we ought to value it by its available heat-units, for in no other way can we arrive better at its true value.

In taking 14,000 heat-units per pound of coal as a basis for calculation, I do not think I am overestimating our Pittsburg coal.

I hope to return to this fuel question later on, for our present methods of getting the energy from coal are certainly away behind our theoretical knowledge.

Discussion.

The President: This is an extraordinarily well-attended meeting, and I am sure that of the members now here a great number did not only come to listen, but also came to say something for themselves. It is an interesting subject, and strikes right home. I hope we will have a little discussion—not a very extended one, because we will have another paper read, but I think we can spend half an hour profitably in listening to what others may have to say. I think Mr. Brashear had better give us his views regarding the measurements of heat by means of the spectroscope.

Mr. John A. Brashear: I think that Mr. Koch has plainly shown us that 85 per cent. of heat is gone, and it is not to be measured.

This is an important paper, and shows what there is for engineers to do in the future, and what there is for such a body as this to discuss. I think this paper is too important to dismiss with either a half-hour's or with a single night's discussion.

While I have not been conversant with the recent work in metallurgy—having left the rolling-mills some fifteen or sixteen years ago—I have always been interested in papers read on this subject.

As to the question of determining heat, there is no doubt but that the spectroscope will come in use in the future.

The polariscope has recently been used very successfully in that direction, and it is only a lack of knowledge on our part that we are not able to use the polariscopes in determining high temperatures with greater accuracy.

There is quite a field for these instruments in measuring high temperatures. I believe there is hope in some of the processes that we have invented; among them I will name one that was used by Professor Very and myself in some studies of the temperature of the sun in comparison with the temperatures of blast-furnaces and puddling-furnaces.

The change in various forms of metallic salts used by the test were very interesting; for instance, we got some very interesting results from the blackening of the iodide of mercury upon a film of collodion, which was instantly blackened by exposure to the

sun, and the time of exposure at a known distance from a source of heat would determine the amount of the temperature if we could only find the unit from which to start. This question is too large to discuss in so short a time, and I hope I will be able to help you in the future.

MR. R. N. CLARK: With your permission, Mr. President, I move that this paper be made the subject of discussion at our meeting in September next; by that time it will be printed and in the hands of all our members. I think the discussion, then, could be made more full.

THE PRESIDENT: Any further remarks, gentlemen?

MR. JOHN A. BRASHEAR: Mr. President, there are several gentlemen here who can discuss this subject well, and I think it would be proper to have a not too prolonged discussion.

MR. NICHOLSON: As to the temperature of the three zones, I would like to ask Mr. Koch if these temperatures were obtained experimentally or approximately—whether the temperatures were obtained by exact experiment, or what methods did he use to deduce these results?

MR. W. E. KOCH: I cannot go into that now; I hope when I publish the paper *in extenso* to give my reasons; it would take too long to explain now, fully. It was done experimentally, however, and I would like to verify some of the experiments again, and go over my calculations again, before the next meeting, and make sure of all these things. As you know, it is very difficult to get two experiments to come out exactly alike.

I would not like to say very much about it to-night, but everything, so far as I have gone, seems to show that we have rated our temperatures vastly too high in all our theoretical considerations.

MR. E. D. ESTRADA: You stated, that you lost 35 per cent. of heat in the producer, and then you had 65 per cent. available, of which you lost 50 per cent., amounting to 85 per cent. lost; you mean 67½ per cent., do you not?

MR. W. E. KOCH: No! No! 50 units more in addition to the first, making 85 per cent.

MR. NICHOLSON: In other words, your estimates are always

on the total quantity of coal—total units of heat in the coal. I would like to ask Mr. Koch if he used the gas-coal in his experiments after purifying it?

MR. W. E. KOCH: No, sir.

THE PRESIDENT: Any further remarks? It is moved and seconded, that the paper which has just been read be printed at once, circulated among the members, and made the subject of discussion at the September meeting.

The motion was carried.

MR. JOHN A. BRASHEAR: I would like to extend to the members of the Engineers' Society of Western Pennsylvania an invitation to visit my works next Thursday afternoon, at any time from noon until half-past five o'clock, when I will have on exhibition the great Star Spectroscope, made for the Naval Observatory at Washington.

THE EFFECT OF SUDDENLY-APPLIED LOADS UPON THE TENSILE STRENGTH, AND OTHER PHYSICAL PROPERTIES OF WROUGHT-IRON AND STEEL.

BY E. D. ESTRADA.

THE fact that the conditions under which the physical properties of structural iron and steel, as at present determined, are greatly at variance with those under which the materials are used, led the writer to investigate the subject here to be discussed.

Plate No. 1, is an illustration of the apparatus designed by the writer for the purpose. It shows, at a glance, the manner of holding the specimens, the mode of action of the loads, and the kind of strain produced. The height to which the hammer (H) was raised being measured by a scale marked on one of the upright leads. The total weight of the hammer was exactly 100 pounds; hence, each foot of drop developed exactly 100 *foot-pounds* of energy.

It will not be necessary to discuss here, in detail, the dimensions

of the other parts of the apparatus. Suffice it to say, that they were so proportioned as to allow the effects produced by the "drop" to be apparent in the specimen, and not in any of the

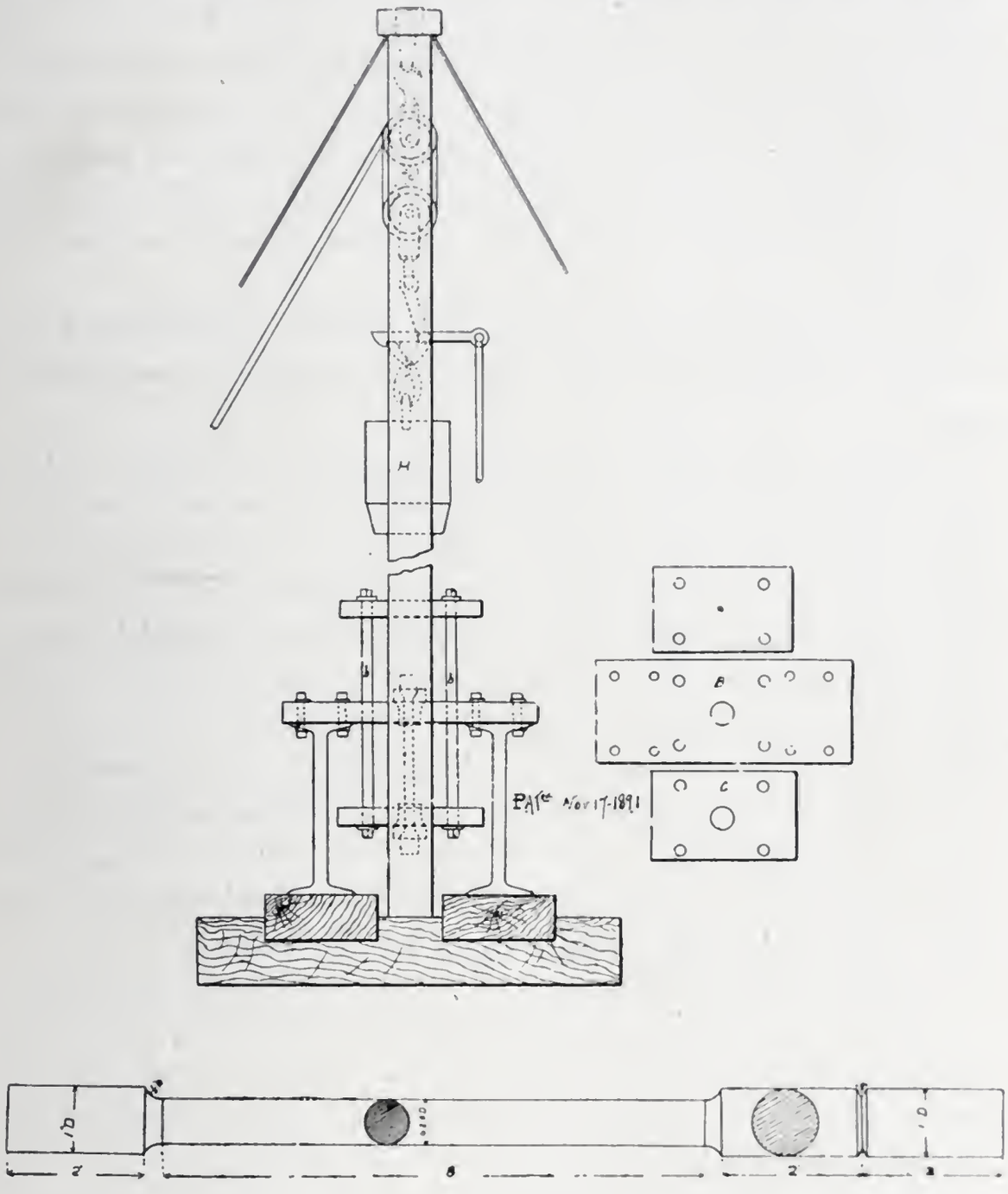

PLATE Nº 1.

other parts of the apparatus, of which the specimen forms an integral part.

On Plate No. 1 is shown an illustration of the standard shape

and dimensions of the specimens used, to which all test-pieces conformed as closely as could be done by ordinary machinists, except in two cases in Series A, and two in Series D, which are specially noted in the tables. While in the lathe, a "nick" was made at one end of each specimen with a sharp V-shaped tool, in order that the character of the internal structure of each specimen could be accurately determined by properly breaking off the "nicked" end. The specimens were cut from material manufactured by Pittsburg firms, who kindly allowed the writer to select material from their stocks whenever desired, and as much as wanted.

The material, therefore, was not especially manufactured for testing, but fairly represents the actual product for commercial uses.

Having determined the physical properties of each kind of material, a bar sufficiently long was taken and cut into lengths of 14 inches; the relative position of each piece was marked, in order that a specimen cut from one end of the bar could be distinguished from one cut from the middle of the bar. The original length of 8 inches was marked on each specimen by two carefully laid-off punched marks, and the elongations produced on each specimen after fracture, or the application of any load, were measured by the difference between the original distance and the one considered.

In a few instances, artificial temperatures were used, which were obtained by a mixture of sal ammoniac and broken ice. In such cases, the artificial temperatures are also given.

Plate No. 2 gives illustrations of the results obtained by the ordinary screw-testing machine, and the "drop" test, showing the location and shape of each fracture. The full lines illustrate the form and dimensions of each specimen before fracture, and the dotted lines after fracture,

Plate No. 3 gives a graphical representation of the law or course of behavior of each specimen in series C.

Material from which the Specimens were Cut.

The specimens in Series A were cut from a bar of common merchant iron, 1 inch in diameter; those of series A_2 were cut

from a bar of rivet-iron, 1 inch in diameter; those of series B were cut from a bar of common merchant steel, 1 inch in diameter; those of Series C were cut from iron bars, $1\frac{1}{16}$ inches square, $1\frac{1}{4}$ inches square, $1\frac{5}{16}$ inches square, and 1 inch square, manufactured

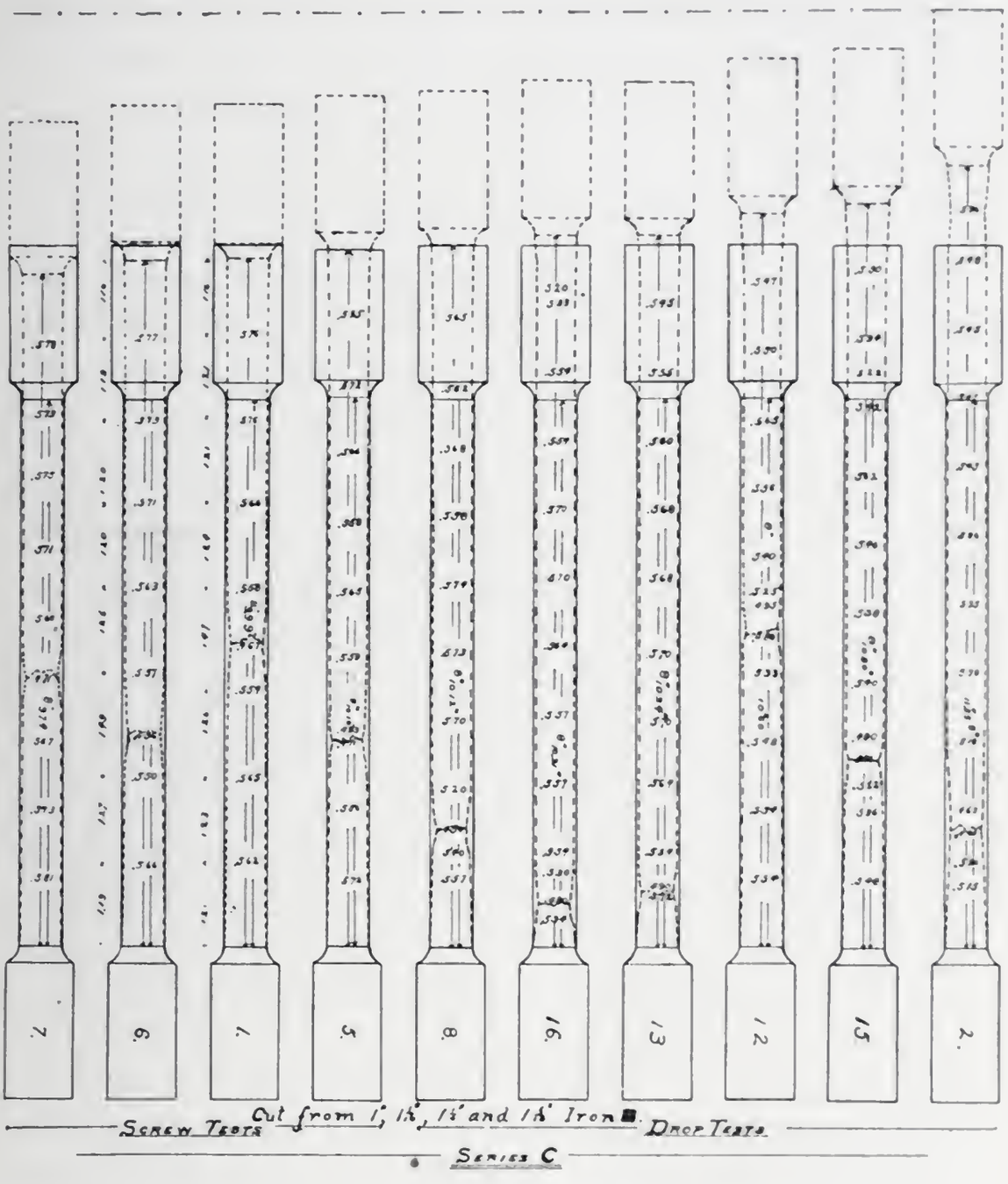

PLATE Nº 2

for the top laterals of a bridge on the P. C. & St. L. Ry. Specimens of Series D were cut from a bar one inch in diameter of the best grade of wrought-iron that could be found by the writer in

the market. Specimens of Series E were cut from double-rolled iron bars, 3 by 1 and 3 by $1\frac{1}{16}$ inches. Specimens of Series F were cut from two of the bolts of the apparatus BB, after this had been used for a considerable time, and which were originally cut from $1\frac{1}{2}$ inches in diameter iron-rods. Specimens of Series G were cut from nickel-steel, a plate 193 by $1\frac{1}{2}$ inches, manufactured for the U. S. Navy. Specimens of Series H were cut from a 3-

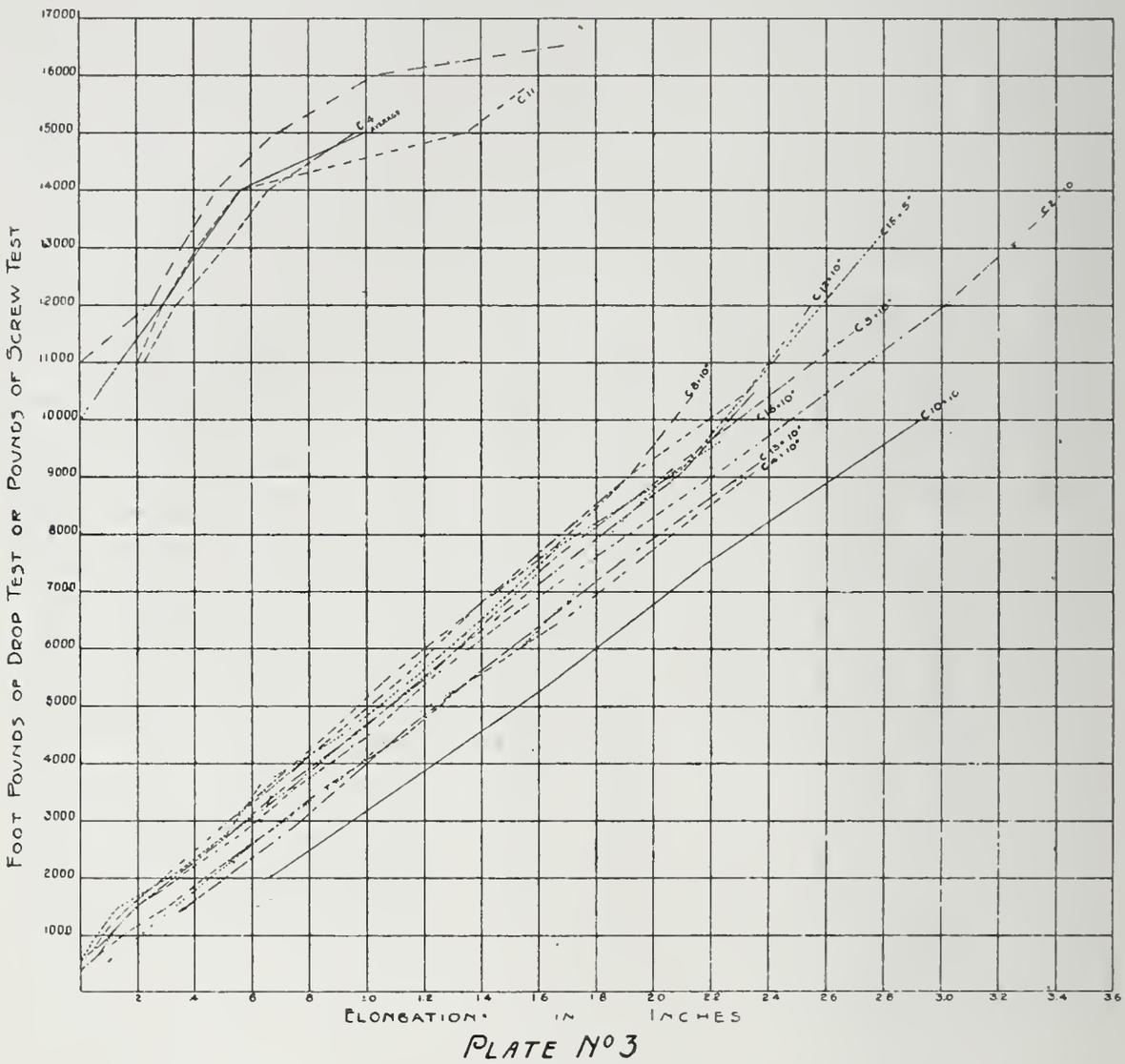

PLATE No 3

inch street-car axle, which broke while in use during one of the coldest days of last winter. Specimens of Series I were cut from 7-inch double-rolled iron bars for bridge purposes.

Noticeable Features brought out by the Experiments.

In a treatise upon the "Elasticity and Resistance of the Materials of Engineering," the following statement is made: "If tensile

stress is suddenly applied to a bar of wrought-iron, both its ultimate resistance and elongation will be very materially decreased. As a mean of a number of tests, Mr. Kirkaldy found, with suddenly applied stress, an ultimate resistance of 46,500 pounds per square inch, while with gradually applied stress it rose to 57,200 pounds. In the former case, the elongation was about 20 per cent., and in the latter as high as 24.6 per cent. Thus it is seen, that the mode of application of external force affects not only the character of the fracture of the iron, but also its ultimate resistance and elongation. It will hereafter be seen that similar observations apply to other metals."

The experiments here described show, that by a suddenly applied load the elongations are *very materially increased.* The entire collection of specimens tested by the sudden application, as well as those tested by the gradual application of a load, are here before you this evening, thus enabling you to verify the results.

Upon examination of the tables, you will notice that the fact is not established from averages or single cases, but from the entire lot; there being not a single exception.

It has also been stated by an authority on the subject, that "steel invariably presents, when fractured slowly, a silky, fibrous appearance; when fractured suddenly, the appearance is invariably granular." The same authority states, that "iron, when fractured suddenly, invariably presents a crystalline appearance; when fractured slowly, its appearance is invariably fibrous." These statements would be correct if the word *some* had been prefixed to the words "iron" and "steel." In this connection, there is a peculiar case which should not escape your notice: Specimen No. 4, Series B, tested by the "drop," shows a fine granular fracture at 90 degrees to the axis of the piece. Specimen No. 1, of the same series, shows a silky, cup-fracture; yet the elongations in both cases are identical. Notice, also, the similarity of the elongations and character of fracture of the specimens B_2 and B_3 of the same series. The relation between the elongations and the reduction of area appears to be dependent upon the quality of the material.

With regard to the effect of temperature, the experiments show that all iron is not affected alike by increase or diminution of tem-

perature, but, that some iron is greatly affected, while other grades are very slightly so, at least between the ordinary ranges of the atmospheric temperature in this locality.

There is a vast amount of literature on this subject. Some writers maintaining that the effect of temperature upon iron is to change its internal structure; and others, that changes of temperature produce no effect at all. Yet, there is not an instance where two experimenters have come to different conclusions after having tested the same kind of iron; nor any case where the character of the structure was carefully determined at a fixed temperature before subjecting the iron to the trials.

The writer, while employed as assistant inspector of bridge materials by the P. C. & St. L. Ry. Co., experimented upon four bars of wrought-iron, two of which were 1 inch square, and the other two, $2\frac{1}{8}$ inches square. These bars were obtained from three different manufacturers. One of the inch squares from one, one of the $2\frac{1}{8}$ inch from another, and the remaining 1 inch square and $2\frac{1}{8}$ inch square from still another. The inch bars were nicked on all sides, at distances of 2 inches, and the $2\frac{1}{8}$ inch bars at distances of 5 inches. One end was broken off each bar by the blows of a sledge, at a temperature of 32° F., and the character of the fracture noted. The remaining bars were broken off at temperatures ranging between 14° F. and 70° F., with the following results: The bar 1 inch square, from one manufacturer, showed slight crystalline traces at 14°, and none above that; the bar $2\frac{1}{8}$ inch, from another manufacturer, when broken at 14° showed a fracture with about 5 per cent. crystalline—further experimenting on this bar was postponed, as it reqnired forty-two blows from a twenty-nine pound sledge to break it, and the energy available was limited.

The 1 inch and $2\frac{1}{8}$ inch bars remaining, showed a decided difference when broken at 14°. The appearance of the $2\frac{1}{8}$ inch bar being very coarse and entirely crystalline. At 32° the character of the fracture was still crystalline, but not as coarse as at 50°, when it showed only about 25 per cent. crystalline.

The fracture of the other bar (1 inch) was entirely fibrous when broken at 50°. Thus, by merely changing the temperature, the

character of the fracture was also changed, often showing one end of a section entirely crystalline, while the other was entirely fibrous.

It is probable that the chemical composition of the iron may account for the difference; however, not having the chemical analysis of the material, it was not possible to make a comparison.

The most important of all the features brought out by these experiments undoubtedly is, that the elastic limit is a variable quantity, depending upon the conditions under which the loads are applied.

Some writers state that, "there is a limit of strain, within which iron is practically indestructible, and that it is a little over 30,000 pounds per square inch for the best grade of iron." This statement does not seem to be verified when the results here given are considered. An examination of the tables here given, containing the effect produced by each drop, shows that in many cases a drop of two feet was sufficient to obtain a permanent set, and, it is likely, that with more accurate means to measure the effect, a drop of one foot, and even less, would have been sufficient to have reached the elastic limit.

Series F shows one characteristic which is worthy of especial note. These specimens, as already stated, were made from the bolts B.B., Plate 1, after service in the drop machine. The bolts were in use for a period of two months, during which they had been subjected to the work of about fifty tests.

Comparing the results of the screw-test of this material with the average results of Series C, D, and E, there is nothing to indicate that the metal had been impaired by the previous work done in the machine. Its ultimate strength, reduction of area, and elongation, all make a very favorable showing, and on the strength of that test, this material would be accepted for any use for which good iron is wanted.

But in the drop-test the result is entirely different. The ultimate strength and reduction of area in F are only about one-half the average of the other three series, and the elongation but little more than one-half, showing very decidedly the effect of the previous work. On this test the material would be rejected as unfit for further use.

The number of tests in Series F are not enough to warrant the announcement of a general principle; but the difference is too striking to be wholly accidental. The writer now contemplates a series of tests to further develop this point, and hopes to be able to establish a special field of usefulness for the drop-test in determining the service value of existing bridges, and the probable life of iron and steel structures in general.

Analysis of Results.

The questions now to be considered are: Why is the elongation increased when the loads are suddenly applied, and why is the elastic limit in like manner diminished? Will the sudden application of a load diminish the strength of a bar of iron or steel from that which it would have developed had the lead been gradually applied?

Let it now be assumed that two identical specimens have been tested, one by the "drop" and the other by the screw machine. What is the cause, what is the effect, and what are the conditions?

The causes are the same in both cases. They imply the conversion of energy, for it matters not how the screws are turned, nor how the weight is raised. The effects produced are different; so are the conditions under which they are produced. If this reasoning is correct, the difference in effects must be due to the difference in conditions. What are the conditions?

In one instance we have a gradually applied load, or one increasing from zero to whatever value it assumes at the instant of rupture. In the other case, we have a load instantly applied. Again, the time of action greatly differed, varying between about three minutes for the screw machine and whatever time it required the specimen to fracture after the hammer had struck the plate "A," which, no doubt, was a short interval.

When the same kind of material is tested in the screw machine it is found that, although the elongation increases as the time diminishes and *vice versa*, the ultimate resistance remains the same. Therefore, it seems reasonable to conclude that the elongation is a time effect, and that for two identical test pieces the resistance which would have to be overcome in both cases before fracture could occur would be the same, irrespective of the

conditions under which the loads were applied, while the effects produced may differ.

Suppose that one of these specimens is placed in position on the "drop" and that the hammer is raised from the ground through a distance of 100 feet. What are the conditions? A body at rest and weighing 100 pounds has been raised to a position from which, if allowed to fall freely, it will do work.

It is said that the energy expended in raising the body has been stored in it in the form of potential energy. When the body is at rest or in motion it is acted upon by gravity with a constant force. Therefore, the effect produced cannot be due to gravity, and since the potential energy is the only available agent through which the effect can be produced, rupture must be the effect of its action. Since gravity is the only force acting upon the hammer while on the ground, and is balanced by its reaction, in order that the hammer could be raised, it will only be necessary to overcome this force. But since it is a constant force and is overcome through a distance of 100 feet, we have Wh as the expression representing the quantity or amount of energy transformed from one condition to another, and which is the measure of the energy, but not the measure of the effect which it may produce. Therefore, when the effects which may be produced by allowing this energy to be transformed are to be considered, we must have an expression involving time, and which is represented by the product of one-half the mass by the square of the velocity.

It appears that the reason for the increase of elongation has been accounted for. In order to account for the reduction of elastic limit it is only necessary to keep in mind the law of the conservation of energy, and notice the fact that the temperature of a specimen is greatly increased while being stretched in the testing machines. How can the energy stored in the body, and which disappears after it has attained the condition of rest, be accounted for, unless it be said that it is converted into heat? If the conditions of the specimen are such that it cannot prevent the total conversion of the energy, it follows that the elastic limit is the point at which the transference of energy begins, and which, therefore, makes this point dependent upon conditions.

The writer wishes to convey his thanks to Mr. T. H. Johnson for the encouragement and aid which he has so often extended to him during the long period of experiment and study necessary for the development of these conclusions.

SERIES A.—*Record of Impact Tests.*

No. 16.				No. 11.				No. 9.			
Drop, in ft.	Elongation, in inches.	Difference.	Atmosphere. Temp. F.	Drop, in ft.	Elongation, in inches.	Difference.	Atmosphere. Temp. F.	Drop, in ft.	Elongation, in inches.	Difference.	Atmosphere. Temp. F.
6	.07	.07	1°	6	.08	.08	1°	25	.....	.....	48°
12	.37	.30	1	12	.39	.31	0	17	.....	.....	48
15	.76	.39	-2	15	.85	.46	-2	17	.....	.....	48
18	1.18	.42	-3	18	1.33	.48	-3	17	1.62	.....	48
10	1.43	.35	-1	10	1.60	.27	-1				
61	.....	.....	.....	61	.....	.....	.....	76	.....	.....	.....
Fracture: Fibrous, irregular.				Fracture: Fibrous, very irregular.				Fracture: Fibrous, irregular.			

No. 10.				No. 1.				No. 12.			
Drop, in ft.	Elongation, in inches.	Difference.	Atmosphere. Temp. F.	Drop, in ft.	Elongation, in inches.	Difference.	Atmosphere. Temp. F.	Drop, in ft.	Elongation, in inches.	Difference.	Atmosphere. Temp. F.
6	.11	.11	1°	6	.07	.07	1°	6	.04	.04	1°
12	.41	.30	0	12	.39	.32	0	12	.36	.32	0
15	.83	.42	-2	15	.85	.46	-2	15	.77	.41	-2
18	1.32	.49	-3	18	1.35	.50	-3	18	1.28	.51	-3
10	1.60	.28	-1	10	1.60	.25	-1	6	1.42	.14	-1
5	1.72	.12	0	10	1.87	.27	0	10	1.70	.28	0
7	.....	.....	32					8	1.90	.20	0
7	1.82	.10	32					12	.....	.....	32
				71	.....	.....	.....	10	2.27	.37	32
80	.....	.....	.....					97	.....	.....	.....
Fracture: Fibrous, 5 pr. ct. crystalline.				Fracture: Fibrous, with slag- and cinder-spots.				Fracture: Fibrous, irregular.			

Series A.—(continued.)

No. 7.				No. 22.				No. 8.			
Drop, in ft.	Elongation, in inches.	Difference.	Atmosphere. Temp. F.	Drop, in ft.	Elongation, in inches.	Difference.	Atmosphere. Temp. F.	Drop, in ft.	Elongation, in inches.	Difference.	Atmosphere. Temp. F.
6	.13	.13	1°	17	.....	.....	48°	25	.....	.....	48°
12	.46	.33	0	17	.....	.....	48	25	.....	.....	48
15	.94	.48	-2	17	.....	.....	48	25	.....	.....	48
18	1.42	.48	-3	17	.....	.....	48	10	2.50	.....	48
10	1.66	.24	-1	7	.....	.....	48				
10	1.90	.24	0	5	2.42	.....	48	85	.....	.....	.....
18	.....	.....	32								
10	2.38	.48	32	80	.....	.....	.....				
99	.....	.....	.....								
Fracture: Fibrous, crystalline.				Fracture: Fibrous, irregular.				Fracture: Fibrous, irregular.			

No. 19.				No. 21.			
Drop, in ft.	Elongation, in 4 in.	Difference.	Atmosphere. Temp. F.	Drop, in ft.	Elongation, in 4 in.	Difference.	Atmosphere. Temp. F.
5	.98	.....	32°	21	.72	.....	32°
5	.98	.....	.....				
10	.....	.....	.....				
Fracture: Fibrous, cup. Original diam., $\frac{5}{16}$ in.				Fracture: Fibrous, 45°. Original diam., $\frac{5}{16}$ in.			

Series A.—*Results Obtained with Impact Machine.*

Number.	Total ft. lbs. per square inch.	Original Area.	Reduced Area.	Per cent. Red. Area.	Elongation in 8 inches.	Per cent. Elongation in 8 in.	Character of Fracture.
16	19,883	.3068	.1963	36.01	1.43	17.87	Fibrous, irregular.
11	19,883	.3068	.1779	42.01	1.60	20.00	Fibrous, very irregular.
9	25,503	.2980	.1779	40.30	1.62	20.25	Fibrous, irregular.
10	26,075	.3068	.1963	36.01	1.82	22.75	Fibrous, 5 pr. ct. crystalline.
1	23,142	.3068	.2075	32.36	1.87	23.37	Fibrous, with slag- and cinder-spots.
12	31,617	.3068	.1870	39.04	2.27	28.27	Fibrous, irregular.
7	32,269	.3068	.1840	40.02	2.38	29.75	Fibrous, crystalline.
22	26,075	.3068	.1825	40.51	2.42	30.25	Fibrous, irregular.
8	27,705	.3068	.1640	46.54	2.50	31.25	Fibrous, irregular.
Av.	25,795	.3058	.1859	39.98	1.99	24.86	
					In 4 in.		
21	27,132	.0774	.0423	45.34	.72	18.00	Fibrous, 45°.
19	12,922	.0774	.0423	45.34	.98	24.50	Fibrous, cup.
Av.	20,027	.0774	.0423	45.34	.85	21.25	

Series A.—*Results Obtained with a Screw Machine.*

Number.	Original Area.	Reduced Area.	Per cent. Red. Area.	Elongation in 8 inches.	Pr. ct. Elong. in 8 in.	Elastic Limit.	Ultimate, per sq. inch.	Temperature	Date.	Time.	Fracture.
13	.3068	.1901	38.03	1.35	15.65	32,692	48,565	.....	2-12-92	.....	Fibrous, very irr.
3	.3068	.1870	39.04	1.44	18.00	.....	49,210	.....	6-6-93	1m. 58s.	Fibrous, 45°.
15	.3068	.1901	38.03	1.54	19.25	.....	48,720	.....	"	2m. 34s.	Fibrous, irreg.
4	.3068	.1901	38.03	1.62	20.25	.....	49,540	.....	"	2m. 23s.	Fibrous, slaggy.
2	.3068	.1840	40.02	1.72	21.50	.....	48,890	.....	6-2-93	50s.	Fibrous, irreg.
5	.3068	.1779	42.01	1.75	21.87	.....	49,210	.....	6-6-93	43s.	Fibrous, irreg.
18	.3068	.1901	38.03	1.78	22.25	34,550	51,830	10°	.....	.....	Fibrous, irreg.
14	.3068	.1870	39.04	1.80	22.50	.....	49,050	.....	6-6-93	35s.	Fibrous, irreg.
6	.3068	.1901	38.03	2.00	25.00	.....	48,890	.....	"	3m. 26s.	Fibrous, irreg.
Av.	.3068	.1874	38.92	1.66	20.70	33,621	49,323	.....	.....	.....	

SERIES A.—*Elongations Obtained with Impact Machine.*

Number.	Height of Drop.				
	6 ft.	12 ft.	15 ft.	18 ft.	10 ft.
	Elongation resulting from each drop.				
16	.7	.30	.39	.42	.35
11	.08	.31	.46	.48	.27
10	.11	.30	.42	.49	.28
1	.07	.32	.46	.50	.25
12	.04	.32	.41	.51	.....
7	.13	.33	.48	.48	.24
Average	.083	.313	.437	.477	.278
Av. pr. ft. of drop	.014	.026	.029	.026	.028

NOTE.—Figures in top horizontal line show distance of fall, with the corresponding elongation below each drop for each piece.

SERIES A_2.—*Record of Impact Tests.*

No. 2.				No. 5.				No. 9.			
Drop, in ft.	Elongation, in inches.	Difference.	Atmosphere. Temp. F.	Drop, in ft.	Elongation, in inches.	Difference.	Atmosphere. Temp. F.	Drop, in ft.	Elongation, in inches.	Difference.	Atmosphere. Temp. F.
10	.36	.36	97°	5	.11	.11	78°	1	.00	.00	00
11	.71	.35	97	7	.40	.29	78	2	.00	.00	00
12	1.10	.39	97	9	.61	.21	78	3	.05	.00	32
13	1.46	.36	97	11	.95	.34	78	4	.12	.07	32
14	1.90	.44	97	13	1.28	.33	78	5	.26	.14	32
15	2.06	.16	97	15	1.70	.42	78	6	.45	.19	32
				17	2.08	.38	78	7	.65	.20	33
75	.....	.....	.....					8	.90	.25	32
				77	.....	.....	.....	9	1.17	.27	32
								10	1.48	.31	32
								11	1.78	.30	32
								12	2.16	.38	32
								13	2.44	.28	32
								91	.....	.....	.....
Fracture: Fibrous, ½ cup.				Fracture: Fibrous, 45°				Fracture: Fibrous.			

SERIES A_2.—*Results Obtained with Impact Machine.*

Number.	Total ft. lbs. per sq. inch.	Original Area.	Reduced Area.	Per cent. Red. Area.	Elongation in 8 in.	Pr. ct. Elon. in 8 in.	Character of Fracture.
2	25,252	.2970	.2027	31.75	2.06	25.75	Fibrous, irregular.
5	25,839	.2980	.1901	36.21	2.08	26.00	Fibrous, 45°.
9	29,855	.3048	.1963	35.60	2.44	30.50	Fibrous.
Av....	26,982	.2999	.1964	34.52	2.19	27.42	

RESULTS OBTAINED WITH A SCREW MACHINE.

Number.	Original Area.	Reduced Area.	Per cent. Red. Area.	Elongation in 8 in.	Pr. ct. Elon. in 8 in.	Elastic Limit.	Ultimate per sq. inch.	Time.	Fracture.
6	.3068	.2124	30.77	1.56	19.50	29.334	48,565	.....	Fibrous, half cup.
7	.3068	.2091	31.83	1.74	21.75	.....	47,580	1m. 45s.	" "
1	.3068	.1840	40.02	1.80	22.50	.....	.....	.....	Fibrous, 45°.
8	.3068	.2027	33.60	1.88	23.50	.....	36,280	45s.	" 45°.
Av...	.3068	.2020	34.05	1.75	21.81	.....	44,142	.....	

SERIES B.—*Record of Impact Tests.*

No. 1.				No. 4.			
Drop, in ft.	Elongation, in inches.	Difference.	Atmosphere. Temp. F.	Drop, in ft.	Elongation, in inches.	Difference.	Atmosphere. Temp. F.
1	.00	.00	70	19	.50	.00	70
2	.02	.02	70	20	.90	.40	70
3	.07	.05	70	20	1.31	.41	70
4	.20	.13	70	20	1.72	.41	70
5	.31	.11	70	11	1.94	.22	70
6	.42	.11	70	90	.....	.....	.....
7	.59	.17	70				
8	.74	.15	70				
9	.95	.21	70				
10	1.16	.21	70				
11	1.35	.19	70				
12	1.64	.29	70				
13	1.94	.30	70				
91	.....	.....	.....				
Fracture: Square, granular, with silky spot at center.				Fracture: 90° fine granular.			

SERIES B.—*Results Obtained with Impact Machine.*

Number.	Total ft. lbs. Per sq. inch.	Original Area.	Reduced Area.	Per cent. Red. Area.	Elongation in 8 in.	Pr. ct. Elon. in 8 in.	Character of Fracture.
1	29,416	.3097	.2190	29.28	1.94	24.25	90° fine granular, with, silky spot at center.
4	29,060	.3097	.1932	37.61	1.94	24.25	Silky, perfect cup.
Av....	29,238	.3097	.2061	33.44	1.94	24.25	

RESULTS OBTAINED WITH A SCREW MACHINE.

Number.	Original. Area.	Reduced Area.	Per cent. Red. Area.	Elongation in 8 in.	Pr. ct. Elon. in 8 in.	Elastic Limit.	Ultimate Per sq. inch.	Atmosphere. Temp. F.	Fracture.
2	.3019	.2229	26.16	1.10	13.75	42,060	66,110	70°	Silky, perfect half cup.
3	.3147	.2215	29.61	1.14	14.25	39,560	66,090	70	" " "
Av	.3083	.2222	27.89	1.12	14.00	40.810	66,100	70	

SERIES C.—*Record of Impact Tests.*

No. 8.

Drop, in ft.	Elongation, in inches.	Difference.	Temp. F.
.....	.....	.....	32°
1	.00	.00	10
2	.00	.00	10
3	.00	.00	10
4	.07	.07	10
5	.16	.09	10
6	.30	.14	10
7	.46	.16	10
8	.64	.18	5
9	.85	.21	5
10	1.06	.21	5
11	1.34	.28	5
12	1.62	.28	5
13	1.92	.30	5
14	2.14	.22	5
105	.....	.....	.....

Fracture: Fibrous.

No. 16.

Drop, in ft.	Elongation, in inches.	Difference.	Temp. F.
.....	.....	.....	32°
10	.20	.20	10
10	.45	.25	10
10	.70	.25	10
10	.97	.27	10
10	1.20	.23	10
10	1.52	.32	10
10	1.72	.20	10
10	1.84	.12	10
10	2.04	.20	10
10	2.33	.29	10
100	.....	.....	.....

Fracture: Fibrous, 45°.

No. 4.

Drop, in ft.	Elongation, in inches.	Difference.	Temp. F.
.....	.....	.....	32°
1	.00	.00	10
2	.00	.00	10
3	.05	.05	10
4	.14	.09	10
5	.30	.16	10
6	.45	.15	10
7	.65	.20	10
8	.85	.20	10
9	1.13	.28	10
10	1.37	.24	10
11	1.70	.33	10
12	2.00	.30	10
13	2.34	.34	10
91	.....	.....	.....

Fracture: Fibrous, 45°, with sand-spot about .07874 in. in diam.

No. 13.

Drop, in ft.	Elongation, in inches.	Difference.	Temp. F.
.....	.....	.....	50°
15	.36	.36	10
15	.75	.39	10
15	1.10	.35	10
15	1.49	.39	10
15	1.87	.38	10
15	2.30	.43	10
3	2.35	.05	10
93	.....	.....	.....

Fracture: Fibrous, irregular.

No. 12.

Drop, in ft.	Elongation, in inches.	Difference.	Temp. F.
.....	.....	.....	50°
1	.00	.00	0
2	.00	.00	0
3	.02	.02	10
4	.07	.05	10
5	.16	.09	10
6	.30	.14	10
7	.46	.16	10
8	.66	.20	5
9	.88	.22	5
10	1.12	.24	5
11	1.34	.22	5
12	1.65	.31	5
13	1.92	.27	5
14	2.32	.40	5
15	2.58	.26	5
120	.....	.....	.....

Fracture: Fibrous, 45°.

No. 3.

Drop, in ft.	Elongation, in inches.	Difference.	Temp. F.
.....	.....	.....	32°
1	.00	.00	10
2	.00	.00	10
3	.02	.02	10
4	.09	.07	10
5	.20	.11	10
6	.35	.15	10
7	.52	.17	10
8	.73	.21	10
9	.94	.21	10
10	1.20	.26	10
20	1.62	.42	10
20	2.15	.53	10
20	2.68	.53	10
115	.....	.....	.....

Fracture: Fibrous, cup.

Series C.

No. 15.			
Drop, in ft.	Elongation, in inches.	Difference.	Temp. F.
.....	.....	.....	50°
1	.00	.00	0
2	.00	.00	0
3	.00	.00	10
4	.05	.05	10
5	.13	.08	10
6	.33	.20	10
7	.51	.18	10
8	.61	.10	5
9	.91	.30	5
10	1.16	.25	5
11	1.41	.25	5
12	1.66	.25	5
13	2.08	.42	..
14	2.32	.24	5
15	2.55	.23	5
12	2.80	.25	..
132	.....	.....	.....
Fracture: Fibrous, irregular.			

No. 10.			
Drop, in ft.	Elongation, in inches.	Difference.	Temp. F.
.....	.....	.....	32°
20	.65	.65	10
20	1.23	.58	10
14	1.63	.40	10
20	2.15	.52	10
16	2.62	.47	10
10	2.92	.30	10
100	.....	.....	.....
Fracture: Fibrous, cup.			

No. 2.			
Drop, in ft.	Elongation, in inches.	Difference.	Temp. F.
.....	.....	.....	72°
1	.00	.00	0
2	.00	.00	...
3	.02	.02	...
4	.09	.07	...
5	.20	.11	...
6	.36	.16	...
7	.56	.20	...
8	.75	.19	...
9	1.00	.25	....
10	1.22	.22	....
11	1.50	.28	....
12	1.84	.34	....
13	2.22	.38	....
14	2.60	.38	....
15	3.00	.40	....
16	3.35	.35	....
136	.....	.....	.....
Fracture: Fibrous, jagged.			

Series C.—(No. 7.)

Drop, in ft.	Elongation, in inches.	Difference.	Temp. F.	Date.	Time.
			50°		
5	.08	.08	10	1-21-90	.....
5	.23	.15	10	"	.....
5	.36	.13	10	"	.....
5	.48	.12	10	"	.....
5	.57	.09	10	"	.....
5	.63	.06	5	1-26-90	.....
5	.66	.03	5	"	.....
5	.76	.10	5	"	.....
40	.....	.....	.....	.....	.....

This specimen was not broken by drop after 8 drops of 5 ft. It was broken in a screw-machine, with the following results:

Original Area.	Reduced Area.	Per cent. Red. Area.	Elongation in 8 in.	Pr. ct. Elon. in 8 in.	Elastic Limit.	Ultimate Per sq. inch,	Temp.	Fracture.
.3048	.1779	41.63	1.76	22.00	.....	54,470	72	Fibrous: Half cup.

Series C.—*Results Obtained with Impact Machine.*

Number.	Total ft. lbs. per sq. in.	Original Area.	Reduced Area.	Per cent. Red. Area.	Elongation in 8 in.	Pr. ct. Elon. in 8 in.	Character of Fracture.
8	34,449	.3048	.1608	47.24	2.14	26.75	Fibrous.
16	32,821	.3048	.1901	37.63	2.33	29.12	Fibrous, 45°.
4	29,856	.3048	.2059	32.44	2.34	29.25	Fib., 45°, with sand-spot about .07874 in. diam.
13	30,512	.3048	.1694	44 42	2.35	29.37	Fibrous, irregular.
12	39,370	.3048	.1901	37.63	2.58	32.25	Fibrous, 45°.
3	37,730	.3048	.1608	47.24	2.68	33.50	Fibrous, cup.
15	43,307	.3048	.1750	42.58	2.80	35.00	Fibrous, irregular.
10	32,821	.3048	.1608	47.24	2.92	36.50	Fibrous, cup.
2	44,619	.3048	.1445	52.26	3.35	41.87	Fibrous, jagged.
Av....	36,165	.3048	.1732	43.19	2.61	32.62	

SERIES C.—*Results Obtained with a Screw Machine.*

Number.	Original Area.	Reduced Area.	Per cent. Red. Area.	Elongation in 8 in.	Pr. ct. Elon. in 8 in.	Elast. Limit.	Ultimate Per sq. inch.	Temp.	Date.	Time.	Fracture.
11	.3048	.1750	42.59	1.84	23.00	35,515	51,678	65	12-11-89	.....	Fibrous, cup.
6	.3048	.1694	44.42	1.96	24.50	33,595	51,182	...	.....	.....	Fibrous, cup.
1	.3048	.1724	43.43	1.98	24.75	37,630	54,133	65	7-11-89	.....	Fibrous, irregular.
14	.3048	.1720	43.57	2.04	25.50	34,118	51,346	65	12-11-89	.....	Fibrous.
9	.3048	.1750	42.58	2.08	27.25	33,590	51,350	62	.....	.....	Fibrous.
5	.3068	.1694	44.78	2.13	26.62	.....	48,890	...	.....	50″	Fib., irreg., cup.
Av...	.3051	.1720	43.56	2.01	25.27	34,450	51,516	...	.....	.....	

SERIES C.—*Elongations Obtained with Impact Machine.*

Number.	Heights of successive Drops, in feet.														
	1	2	3	4	5	6	7	8	9	10	11	12	13	14	15
	Elongation produced by each Drop.														
8	.00	.00	.00	.07	.09	.14	.16	.18	.21	.21	.28	.28	.30	.22	...
4	.00	.00	.05	.09	.16	.15	.20	.20	.28	.24	.33	.30	.34	...	...
12	.00	.00	.02	.05	.09	.14	.16	.20	.22	.24	.22	.31	.27	.40	.20
3	.00	.00	.02	.07	.11	.15	.17	.21	.21	.26	...	...	...	...	...
15	.00	.00	.00	.05	.08	.20	.18	.10	.30	.25	.25	.25	.42	.24	.23
2	.00	.00	.02	.07	.11	.16	.20	.19	.25	.22	.28	.34	.38	.38	.40
Average.....	.00	.00	.018	.067	.106	.157	.178	.180	.245	.237	.272	.296	.342	.310	.277
Average pr. ft. drop..	.000	.000	.006	.017	.021	.026	.025	.023	.027	.024	.025	.024	.026	.022	.018

SERIES D.—*Record of Impact Tests.*

No. 2.

Drop, in ft.	Elongation, in inches.	Difference.	Atmosphere. Temp. F.
25	.74	.74	15°
25	1.44	.70	15
25	2.11	.67	15
25	2.94	.83	15
100	.....	.....	.....

Fracture: Fibrous, cup, irregular.

No. 3.

Drop, in ft.	Elongation, in inches.	Difference.	Atmosphere. Temp. F.
25	.....	.....	32°
25	.....	.....	32
25	.....	.....	32
25	2.96	.....	33
100	.....	.....	.....

Fracture: Fibrous, irregular, 45°.

No. 4.

Drop, in ft.	Elongation, in inches.	Difference.	Atmosphere. Temp. F.
25	.....	.....	40°
25	.....	.....	40
25	.....	.....	40
25	3 12	.....	40
100	.....	.....	.....

Fracture: Fibrous, jagged, cup.

No. 5.

Drop, in ft.	Elongation, in inches.	Difference.	Atmosphere. Temp. F.
25	.....	.....	26°
25	.....	.....	26
25	.....	.....	26
25	.....	.....	26
2	3.14	.....	26
102	.....	.....	.....

Fracture: Fibrous, jagged.

No. 6.

Drop, in ft.	Elongation, in inches.	Difference.	Atmosphere. Temp. F.
5	.....	.....	40
5	.....	.....	40
5	.....	.....	40
5	.....	.....	40
5	.....	.....	40
5	.....	.....	40
5	.....	.....	40
5	.....	.....	40
5	.....	.....	40
5	1.19	.....	40
5	.....	.....	40
5	.....	.....	40
5	.....	.....	40
5	.....	.....	40
5	.....	.....	40
5	.....	.....	40
5	.....	.....	40
5	.....	.....	40
5	.....	.....	40
5	.....	.....	40
5	2.47	.....	40
5	.....	.....	40
5	.....	.....	40
5	.....	.....	40
5	.....	.....	40
5	.....	.....	40
5	.....	.....	40
5	3.44	.....	40
135	.....	.....	.....

Fracture: Fib., cup.

No. 7.

Drop, in ft.	Elongation, in inches.	Difference.	Atmosphere. Temp. F.
25	1.24	.....	40°

Fracture: Fibrous, jagged, cup.
Original diam., $\frac{7}{16}$ in.

No. 8.

Drop, in ft.	Elongation, in inches.	Difference.	Atmosphere. Temp. F.
20	.72	.....	40°

Fracture: Fibrous, irregular, cup.
Original diam., $\frac{7}{16}$ in.

SERIES D.—*Results Obtained with Impact Machine.*

Number.	Total foot lbs. per square in.	Original Area.	Reduced Area.	Per cent. Reduced Area.	Elongation in 8 in.	Pr. et. Elon. in 8 in.	Character of Fracture.
2	32,594	.3068	.1340	56.32	2.94	36.75	Fib., cup, irreg.
3	32,594	3068	.1527	50.22	2.96	37.00	Fibrous, 45°, ir'eg.
4	32,594	.3068	.1219	60.26	3.12	39.00	Fib., jagged, cup.
5	33,246	.3068	.1266	58.73	3.14	39.25	Fibrous, jagged.
6	44,002	.3068	.1219	60.26	3.44	43.00	Fibrous, cup.
Av....	35,006	.3068	.1314	57.16	3.12	39.00	
					In 4 in.	In 4 in.	
7	17,630	.1418	.0683	51.83	1.24	31.00	Fib., jag'd, cup.
8	13,158	.1520	.0647	57.43	In 2 in. .72	In 2 in. 36.00	Fib., cup, irreg.
Av.....	15,394	.1469	.0665	54.63	.....	.....	

SERIES D.—*Results Obtained with a Screw Machine.*

Number.	Original Area.	Reduced Area.	Per cent. Red. Area.	Elongation in 8 in.	Pr. et. Elon. in 8 in.	Elast. Limit.	Ultimate per sq. inch.	Temp.	Fracture.
0	.3068	.1314	57.17	2.40	30.00	32920	49280	32°	Fibrous, cup.
1	.3068	.1314	57.17	2.12	26.50	32900	48200	50	Fibrous, irreg., cup.
Av...	.3068	.1314	57.17	2.26	28.25	32910	48740	.....	

Series E.—*Record of Impact Tests.*

No. 2.				No. 3.				No. 4.			
Drop, in ft.	Elongation, in inches.	Difference.	Atmosphere. Temp. F.	Drop, in ft.	Elongation, in inches.	Difference.	Atmosphere. Temp. F.	Drop, in ft.	Elongation. in inches.	Difference.	Atmosphere. Temp. F.
20	.54	.54	15°	1	.00	.00	0°	20	.60	.60	13°
20	1.10	.56	15	2	.00	.00	0	20	1.22	.62	13
20	1.64	.54	15	3	.02	.02	0	20	1.76	.54	13
20	2.18	.54	15	4	.06	.04	0	20	2.38	.62	13
80	.....	.....	.....	5	.14	.08	0	15	2.70	.32	13
Fracture: Fibrous, cup.				6	.26	.12	0	95	.....	.....	.....
				7	.42	.16	0	Fracture: Fibrous, irregular.			
				8	.62	.20	0				
				9	.86	.24	0				
				10	1.09	.23	0				
				11	1.32	.23	0				
				12	1.66	.34	15				
				13	2.02	.36	15				
				14	2.28	.26	15				
				105	.....	.....	.....				
				Fracture: Fibrous, irregular.							

Series E.—*Results Obtained with Impact Machine.*

Number.	Total ft. lbs. per sq. in.	Original Area.	Reduced Area.	Per cent. Red. Area.	Elongation in 8 in.	Pr. ct. Elon. in 8 in.	Character of Fracture.
2	26,075	.3068	.1750	42.96	2.18	27.25	Fibrous, cup.
3	34,224	.3068	.2011	34.45	2.28	28.50	Fibrous, irregular.
4	30,925	.3068	.1569	48.86	2.70	33.75	Fibrous, irregular.
Av.....	30,408	.3068	.1777	42.09	2.39	29.83	

Results Obtained with a Screw Machine.

Number.	Original Area.	Reduced Area.	Per cent. Red. Area.	Elongation in 8 in.	Pr. ct. Elon. in 8 in.	Elastic Limit.	Ultimate Per sq. inch.	Temp. F.	Fracture.
1	.3068	.2350	23.40	1.48	18.50	34,230	50,200	.....	Fibrous, irreg'lar, spongy.

SERIES F.—*Record of Impact Tests.*

No. 2.			
Drop, in feet.	Elongation. in inches.	Difference.	Atmosphere. Temp. F.
25	.....	.....	40°
25	1.60	.....	40
50	.....	.....	.....

Fracture: Fibrous, irregular.

RESULTS OBTAINED WITH IMPACT MACHINE.

Number.	Total ft. lbs. per sq. in.	Original Area.	Reduced Area.	Per cent. Red. Area.	Elongation in 8 in.	Pr. et. Elon. in 8 in.	Character of Fracture.
2	16,297	.3068	.2316	24.51	1.60	20.00	Fibrous, irregular.

RESULTS OBTAINED WITH A SCREW MACHINE.

Number.	Original Area.	Reduced Area.	Per cent. Red. Area.	Elongation in 8 in.	Pr. ct. Elon. in 8 inches.	Elastic Limit.	Ultimate per sq. inch.	Temp. F.	Fracture.
1	1.474	.8609	41.59	2.16	27.00	30,870	50,750	.....	Fibrous.

Series G.—*Record of Impact Tests.*

No. 2.				No. 3.				No. 4.			
Drop, in ft.	Elongation, in inches.	Difference.	Atmosphere. Temp. F.	Drop, in ft.	Elongation, in inches.	Difference.	Atmosphere. Temp. F.	Drop, in ft.	Elongation, in inches.	Difference.	Atmosphere. Temp. F.
20	.....	.....	40°	20	.34	.34	5°	25	.....	.....	48°
18	.....	.....	40	25	.65	.31	5	25	.....	.....	48
25	.....	.....	40	25	.98	.33	26	25	.....	.....	48
25	.....	.....	40	25	1.35	.37	26	25	.....	.....	48
25	1.80	.....	40	25	1.75	.40	26	25	2.30	.....	48
				25	2.08	.33	26				
				25	2.25	.17	26				
113	.....	.....	.....	170	.....	.....	.....	125	.....	.....	.....
Fracture: Coarse, dull, cup.				Fracture: Coarse, dull, jagged, half-cup.				Fracture: Silky, half-cup.			

Results Obtained with Impact Machine.

Number.	Total ft. lbs. per sq. in.	Original Area.	Reduced Area.	Per cent. Red. Area.	Elongation in 8 in.	Pr. ct. Elon. in 8 in.	Character of Fracture.
2	36 832	.3068	.1445	52.90	1.80	22.50	Coarse, dull, cup.
3	39,113	.3068	.1340	56.32	2.25	28.12	Coarse, dull, jagged, ½-cup.
4	40,743	.3068	.1366	55.49	2.30	28.75	Silky, half-cup.
Av...	38,896	.3068	.1383	54.90	2.12	26.46	

Results Obtained with a Screw Machine.

Number.	Original Area.	Reduced Area.	Per cent. Red. Area.	Elongation in 8 in.	Pr. ct. Elon. in 8 in.	Elastic Limit.	Ultimate per sq. inch.	Temp. F.	Fracture,
1	.3068	.1625	47.03	1.38	17.50	41,720	77,580	.....	Coarse, 45°.

Series H.—*Record of Impact Tests.*

No. 2.			
Drop, in ft.	Elongation, in inches.	Difference.	Atmosphere, Temp. F.
25	.68	.68	32°
25	.....	.....	32
25	.....	.....	32
25	.....	.....	32
25	2.68	2.00	32
125	.....	.....	.....
Fracture: Jagged, cup, coarse, dull.			

Results Obtained with Impact Machine.

Number.	Total ft. lbs. per sq. in.	Original Area.	Reduced Area.	Per cent. Red. Area.	Elongation in 8 in.	Pr. et. Elon. in 8 in.	Character of Fracture.
2	40,743	.3068	.1052	65.71	2.68	33.50	Jagged, cup, coarse, dull.

Results Obtained with a Screw Machine.

Number.	Original Area.	Reduced Area.	Per cent. Red. Area.	Elongation in 8 in.	Pr. ct. Elon. in 8 in.	Elastic Limit.	Ultimate Per sq. inch.	Temp.	Fracture.
1	.3068	.1295	57.79	2.00	25.00	38,140	57,690	.....	Coarse, ½-cup.

Series I.—*Record of Impact Tests.*

No. 2.				No. 3.				No. 4.			
Drop, in ft.	Elongation, in inches.	Difference.	Atmosphere. Temp. F.	Drop, in ft.	Elongation in inches.	Difference.	Atmosphere. Temp. F.	Drop, in ft.	Elongation in inches.	Difference.	Atmosphere. Temp. F.
.....	.....	.....	32°	25	.....	.....	48°	25	.....	.....	26°
				25	.....	.....	48	25	.....	.....	26
20	.10	.....	10	10	.....	.....	48	25	1.96	.....	26
				10	1.92	.....	48				
Fracture: Square, granular.				70	.....	.....	.....	75	.....	.....	.....
				Fracture: Fibrous, very irregular.				Fracture: Crystalline, spot showing lines of piling.			

Results Obtained with Impact Machine.

Number.	Total ft. lbs. per sq. in.	Original Area.	Reduced Area.	Per cent. Red. Area.	Elongation in 8 in.	Pr. ct. Elon. in 8 in.	Character of Fracture.
2	6,520	.3068	.3039	00.94	.10	1.25	Square, granular.
3	22,602	.3097	.2248	27.41	1.92	24.00	Fibrous, very irregular.
4	24,446	.3068	.2002	34.75	1.96	24.50	Crystalline, spot showing lines of piling.
Av..	17,856	.3078	.2430	21.03	1.33	16.58	

Results Obtained with a Screw Machine.

Number.	Original Area.	Reduced Area.	Per cent. Red. Area.	Elongation in 8 in.	Pr. ct. Elon. in 8 in.	Elastic Limit.	Ultimate per sq. inch.	Temp. F.	Fracture.
1	.3068	.2282	25.61	1.44	18.00	31,000	50,000	.....	Fibrous, irreg.

Summary of Average Results.

Series.	Drop Test.			Screw Test.			Remarks.
	Ultimate Strength.	Per cent of		Ultimate Strength.	Per cent. of		
	Ft. lbs. per sq. in.	Reduc.	Elong.	Ft. lbs. per sq. in.	Reduc.	Elong.	
A.....	25,795	39.98	24.86	49,323	38.92	20.70	Merchant bar-iron.
A_2.....	26,982	34.52	27.42	44,142	34.05	21.80	Rivet-iron.
B.....	27,238	33.44	24.25	66,100	27.89	14.00	Merchant bar-steel.
C.....	36,165	43.19	32.62	51,516	43.56	25.27	D'ble-rol'd bridge-iron.
D.....	35,006	57.16	39.00	48,740	57.17	28.25	" bar-iron.
E.....	30,408	42.09	29.83	50,200	23.40	18.50	" " [mach.
F.....	16,297	24.51	20.00	50,750	41.59	27.00	Iron bolts, after drop
G.....	38,896	54.90	26.46	77,580	47.03	17.50	Nickel-steel.
H.....	40,743	65.71	33.50	57,690	57.79	25.00	Broken st.-car axle.
I.....	37,419	21.03	16.58	50,000	25.61	18.00	D'ble-rol'd bridge-iron.

Discussion.

The President: This paper, if I remember rightly, is the outcome of the appointment of a committee, subsequent to the reading of a paper here in 1887, vol. iii. of our *Proceedings*, by Mr. Joseph Ramsey, in which he gave the results of some tests made on iron for bridges of the C. H. & D. R. R., on which he was at that time employed, and the tests made of this iron appeared to show very different results (although coming from the same manufacturer, and being apparently the same output) when tested at one temperature and subsequently tested at another temperature. Mr. Ramsey became very much alarmed when some of the tests made during excessively cold weather produced very astonishing results, indicating that the metal was very much inferior to what it had shown itself to be when tested at a higher temperature.

The paper read by Mr. Ramsey was extensively discussed, and resulted in the appointment of a committee which has labored through successive ages, and, I believe, eventually made a preliminary report. I may be somewhat mistaken now, but I think that the committee was continued after making its partial report, Mr. Estrada being made one of the committee, and he has practically taken upon himself the investigation of the results which the

committee had in charge, at least so far as the temperature effects upon metal are concerned.

I think the method of applying the drop-test is entirely Mr. Estrada's own, and the adoption of that method was his own choice. I think that Mr. Johnson—who has been highly complimented by Mr. Estrada for his interest in the matter—may have something to say on this subject.

MR. E. D. ESTRADA: I was not one of that committee. I was not connected with the committee.

THE PRESIDENT: I may be mistaken on this point; but this does not, in the least, detract from our interest in the paper. I thought the committee had been enlarged and that you had been added.

MR. E. D. ESTRADA: No, sir.

MR. THOS. H. JOHNSON: The temperatures of the several tests are all recorded in the tabular statements, but their effects are not brought out in the paper as prominently as might have been. The result may be summarized in the statement that good material acts just as well at low temperature as at ordinary temperature; just as well in winter as in summer.

THE PRESIDENT: And just as bad.

MR. JOHNSON: Just as bad; and the inferior grades of material which are sometimes found in the market are very bad at either temperature.

MR. SCAIFE: But worse at low temperature.

MR. JOHNSON: Yes. Mr. Estrada's experiments seem to lead to one point, at least, which differs from the text-books, in that we have always been taught to look upon the elastic limit as a definite property of the material, bearing a nearly constant relation to its ultimate strength, while these tests go to show that it is not a fixed property of the material, but is variable with the conditions of test.

In the ordinary testing-machine, the load is applied gradually, starting from zero, and attaining the full load only at the end of the test. With Mr. Estrada's drop-test the load is applied instantly, as a sudden blow. In the former case, we find a so-called elastic limit, within which there is no permanent set, and

beyond which the rate of stretch increases rapidly up to the point of rupture. In the latter case, we find a decided permanent set with the first blow of the drop, even with a fall as low as two feet (200 foot-pounds), and the rate of stretch is constant throughout the test.

We have, therefore, in the one case, an elastic limit at one-half to two-thirds of the ultimate strength; and in the other case, this limit dropping to about zero. The material is the same in both cases. The difference is wholly in the mode of applying the load. We can, therefore, no longer regard the elastic limit as a property of the material, but as a function of the conditions of the test.

This is directly at variance with accepted principles, and will require whole chapters of our text-books to be rewritten.

The explanation of this change in the elastic limit is found in what Mr. Estrada referred to in connection with the conservation of energy. If a piece of metal is strained in such a way that no portion of the applied energy is converted into heat, then, upon release, that stored-up energy will restore the piece to its original length. But, if any portion of that energy has been converted into heat, the diminished energy will not restore the piece to its original length, and it receives a permanent set proportional to the amount of energy lost; and, whatever change of conditions tends to change the amount of energy so lost, will change the elastic limit.

THE PRESIDENT: We are spending an immense amount of time in testing material by the usual methods. The machinery is complicated and expensive, and, if an ordinary tripod can be rigged up in any mill yard and a weight dropped down from it which will tell the story as accurately as any other testing machine, it would save labor and expense.

MR. KOCH: That would be going backward. When we first started in to make steel away back in the seventies we used to make the drop test on everything, tires, axles, bars and plates, and you have no idea of the excessive labor and difficulties caused in these tests: After a bridge member was made it would be put on so many supports, so far apart, and struck with certain weights; we were nearly crazy with the tests, but the drop test was banished, as you know; at any rate it was no criterion at all.

I have seen a rail of the best material, made of open-hearth steel under .04 per cent. phosphorus, under .04 per cent. sulphur, low in manganese, and not very high in carbon, say 38 to 42 carbon, on a frosty morning break under the drop, whereas if they waited until 12 o'clock and left the rail exposed to the heat of what sun you can get in England, it would go through all right.

I have seen one tire put under the drop and withstand several blows, and the very next tire to it, made from the same ingot, put under the drop go into four pieces at the first blow. I would rather take a piece and pull the test every time. I do not believe in a sudden blow or a sudden break. I do not say so much about iron, but I am against a sudden blow for steel.

The way we tested steel in the old days, was what I call the blacksmith test, and I would trust this test now in preference to any other. A good blacksmith can test good steel for you more intelligently than any machine.

Mr. Johnson: Mr. Koch's remarks apply to the drop test in transverse loading, but Mr. Estrada's drop test is a direct pull.

Mr. Brashear: Take two tires; you say, one of them breaks into four pieces; the next one does not break, and it will stand twenty blows of the hammer. Now if there is just a little line of demarcation between fracture and non-fracture, and the blow does not break one of them, the energy must be converted into heat in the case of the one not broken, and that measure of heat raises the temperature of the whole mass and makes it more resistant when the second blow has been applied, and that possibly goes into heat, and so on. If in the old blacksmith test you take a bar and break it the first time, it breaks very easily if hit hard enough, but if you do not break it the first time the energy has been converted into heat, and thus makes the conditions of the second blow different from the first.

The President: This paper contains a large amount of information in the shape of tabled results which I think well worth reading and considering, because they do tell a story, there is no doubt of that.

These tests have been made with a great deal of pains and care, and for the purpose of bringing about results that would lead to

increased knowledge. There has been no other consideration actuating Mr. Estrada, I know. He has volunteered to do this thing, and the paper should receive more attentive consideration in the way of discussion, and it strikes me that we ought to treat it in the same way as we proposed to do with Mr. Koch's, have it printed, distributed among the members and taken up for discussion at the September meeting, when we have time to discuss it.

A motion in line with the above was made and carried.

Mr. A. Snyder here presented the Society with a collection of blue prints relating to various points of interest in Western Pennsylvania, one relative to the first experiment in extracting petroleum oil from cannel slate made in this country, and the others showing the disastrous effects of the great wave in the Conemaugh Valley, May 31, 1889. After a few remarks in reference to Messrs. Berg and Gillespie, the pioneers in the oil industry, Mr. Snyder continued as follows:

"In 1853 they began their experiments and after three years' experimenting and expenditure of $20,000, they succeeded in making a satisfactory illuminating oil. Mr. Berg—as he explained to me—took a two gallon can and a lamp to Pittsburg and no one would touch it. He then went to Philadelphia and no one would have anything to do with such 'a dangerous explosive;' at the same time they were using camphine. He went to New York and there was only one man in New York whom he could get to talk or look at the oil and he was Mr. Pratt, and he—as Mr. Berg says—out of pity for him took a barrel of the oil at 50 cents per gallon delivered in Pittsburg. A few days after that he ordered 5 barrels; then he said to Mr. Berg, 'I will take all you can make at 50 cents per gallon.' The business was highly remunerative at that price. Four establisments were started and a great deal of money was made at the business, but unfortunately in 1859 when crude petroleum was cheap it did not pay to distill it.

"Mr. Berg thinks that the petroleum which he obtained by the distillation of cannel slate was superior to the petroleum we have now.

"Mr. Berg is now 90 years old and says that if he was twenty years younger he would try it again. He claims that he had 20 per cent. more illuminating power than with crude petroleum."

THE PRESIDENT: About '55 or '56 there was a large amount of oil distilled from cannel slate in central Ohio, near Newark and Coshocton.

MR. SNYDER (Exhibiting blue prints): I want to direct your attention to these two blue prints or plans; this plan shows the condition of the Conemaugh Valley, above Johnstown, Pennsylvania, at the yard of the Pennsylvania Railroad at 3.45 P.M., on the 31st day of May, 1889, before the arrival of the great wave trom the Western Reservoir. This plan shows the condition of the yard at 15 minutes after 4 o'clock, after the passage of the great wave. This is the area covered by the river before arrival of the wave, and this shows the area covered by the great wave as it came down.

You will see this is a portion of the town which was entirely wiped out. Now there was standing in the round house and on the tracks thirty-one locomotives ready for duty and here are where they landed after the passing of the wave.

MR. SCAIFE: What was the average weight of the locomotives?

MR. SNYDER: Here is a table giving the weight and number of each of the locomotives and the distance carried. Thirty-one locomotives, averaging about 100 tons each, moved an average distance of 816 feet, that is equivalent to 2,110,445 pounds moved 1 foot.

Now there were only four tanks left, the remainder were all carried away; but this shows the position of the locomotives after passage of the wave.

This is a more elaborate blue print, embracing the same information in one map, showing the position of each of these engines in dotted lines before the flood and the position they landed after the flood.

It is very curious to note how these engines were carried away. For instance, No. 9 was carried away there. That engine stood in the round house and was carried down there. Another stood right along side and was carried only to there.

There was standing here on this track the second section of the day express, consisting of one locomotive and seven cars; right on the next track was the first section of the day express consisting of two engines and seven cars. The first section was not separated at all but just shoved back in that position; both engines right alongside it were carried away altogether.

Here are cross-sections of the valleys at the above points indicated by these lines; you can see how the valley widens out. Now you will see here is the elevation of the waves that came down the Conemaugh; it was higher on this side.

I have a small blue print showing the various routes crossing the Allegheny Mountains, the Allegheny Portage Railway and the route to avoid the Portage Railway built by the Commonwealth and the Pennsylvania Railroad, etc.

I would be glad if the members of the Society would call the attention of any of their friends to these maps.

Mr. Thomas H. Johnson presented the Society with copies of the maps of the Pennsylvania State Weather Service, under the direction of the Committee on Meteorology of the Franklin Institute, embracing 1887 to 1892 inclusive.

On motion a vote of thanks was tendered the gentlemen presenting the various maps to the Society.

Adjourned.

R. N. CLARK,
Secretary.

MINUTES OF CHEMICAL SECTION MEETING.

JUNE 27TH, 1893.

Mr. J. H. Eastwick, Chairman. Mr. James O. Handy, Secretary.

Fifteen members were present.

The minutes of the last meeting were read and approved.

Mr. James O. Handy read a paper on "Moisture Determination in Dynamite."

"Notes on Phosphorus Determination," by James O. Handy and G. O. Loeffler, were read.

Mr. R. B. Carnahan, Jr., described a method of precipitating phosphorus by means of a strong current of air on natural gas.

Professor F. C. Phillips described other methods of utilizing natural gas in chemical work.

Messrs. Carnahan and McKenna had discovered that phosphorus in pig-iron could not always be accurately determined, unless oxidation was effected by evaporation of the nitric acid solution to dryness.

The society adjourned until the fourth Tuesday in September.

DYNAMITE ANALYSIS.

BY JAMES O. HANDY, CHEMIST PITTSBURG TESTING LABORATORY.

(*a*) *Moisture Determination.*—The determination of moisture in dynamite is rendered difficult by the volatility of nitro-glycerine.

Allen (*Com'l Organic Analysis*, vol. ii.) says that nitro-glycerine volatilizes sensibly with the least increase of temperature.

The usual method is to dry the sample in a desiccator over H_2SO_4, or $CaCl_2$. This is tedious.

We hasten the process by drawing a stream of dried air quickly over the surface of the dynamite sample.

We put 1 gramme of dynamite in a 1-inch porcelain crucible, and place the crucible at the bottom of an extra wide-mouthed bottle of about 600 c.c. capacity.

Air, which has been dried by bubbling through H_2SO_4, is drawn over the surface of the sample for three hours. The air passes approximately at the rate of 10 c.c. per second.

The tube by which the dry air enters the wide-mouthed bottle extends down to within 1 inch of the crucible containing the dynamite.

An empty safety-bottle is connected with the inlet, and another with the outlet of the wide-mouthed bottle. The first guards against the mechanical carrying over by the air-current of H_2SO_4 from the drying-bottle into the sample. The second prevents spasmodic outbursts of water from the exhaust from reaching the sample.

Our experiments were made on samples of dynamite of the following composition :

No.	Moisture. Per cent.	Nitro-Glyc. Per cent.	Nitrate of soda. Per cent.	Wood pulp. Per cent.	Ash. Per cent.
10,911,	2.76	30.24	52.64	14.08	.28
10,912.	1.06	39.37	48.87	10.33	.36
11,018,	1.05	16.61	69.09	9.06	4.19

The following results were obtained :

Moisture Determinations (effect of long exposure to a current of dried air) :

	Time of exposure.						
	1 hour.	2 hours.	3 hours.	4 hours.	5 hours.	7 hours.	11 hours.
No.	Per ct.	Per ct.	Per ct.	Per ct.	Per ct.	Per ct.	Per ct.
10,911,	—	—	2.75	—	2.76	—	—
10,912,	—	—	1.04	—	1.08	—	—
11,018,	—	—	1.05	1.05	—	1.05	1.05

These experiments indicated that three hours is sufficient time for a moisture determination in dynamite by the process described.

In order to further test the volatility of nitro-glycerine itself at summer temperature, we made the following experiment :

One-half gramme of nitro-glycerine, absorbed in filter-paper was exposed for 6 hours to a rapid current of dried air. Its loss in weight was less than half a milligram. The temperature of the air was about 85° F.

ESTIMATION OF SUGAR IN THE PRESENCE OF SODIUM NITRATE AND TRACES OF NITRO-GLYCERINE.

BY JAMES O. HANDY.

In the analysis of a certain explosive mixture, it was necessary to determine the amount of sugar present. We found that the presence of sodium-nitrate with traces of nitro-glycerine in the sugar solution did not prevent the accurate estimation of the sugar by Fehling's test.

The sample contained : Sugar, 1.44 per cent. ; nitrate of soda, 60.60 per cent.

PHOSPHORUS DETERMINATION.

BY JAMES O. HANDY AND G. O. LOEFFLER.

(Notes from P. T. L. Practice.)

(*a*) *A comparison of hot with cold weighings of ammonium phospho-molybdate:*

First Method.—The filter with the yellow precipitate was weighed immediately after taking from the oven. The filter had been similarly dried and weighed.

Second Method.—Same as first, except that the filter and precipitate and the filter itself were each allowed to cool for fifteen minutes *in the air* before weighing.

Third Method.—Same as second, except that each was allowed to stand for fifteen minutes *in a desiccator* before weighing.

	First method.	Second method.	Third method.
Steel A (.096 per ct. P.),	.095 per ct.	.101 per ct.	.094 per ct.
	.096 per ct.	——	——
Steel B (.097 per ct. P),	.099 per ct.	.104	——
Steel No. 35 .150 per. ct. P.),	.150 per ct.	.155	——

It is evident from the above, that correct results can be obtained either by the first or third methods of procedure.

(*b*) *How long must newly made ammonium molybdate solution stand before it can be safely used for analysis?*

Experiments made April 19, 1893. Used Wood's formula for molybdate (see *Trans. E. S. of W. Pa.*, vol. viii., page 80).

Column A shows results obtained by using the filtered molybdate solution, four hours after making it up. Column B shows results with same molybdate solution when used after it had stood twenty-four hours:

	A.	B.
Steel No. 1, ...	.127 per cent.	.129 per cent.
Steel No. 2, ...	.137 per cent.	.137 per cent.

These results show that molybdate solution, of Wood's formula

containing Marquart's molybdic acid), can be used safely four hours after manufacture.

(c) *Can phosphorus be precipitated at 25° C. by five minutes shaking?*

Our experiments show that shaking violently, by hand, for five minutes, *will not* precipitate phosphorus completely at 25° C.

	Precipitated at 25° C., and filtered at once.
Steel No. 1 (Phos. .093 per cent.), . . .	.075 per cent.
Steel No. 2 (Phos. .018 per cent.), . . .	.005 per cent.
Steel No. 3 (Phos. .110 per cent.), . . .	.075 per cent.

These experiments were made by Mr. A. K. Church. They apparently controvert the statement of Mr. H. C. Babbitt. See "Notes on Emmerton's Method for the Determination of Phosphorus" (*A. I. M. E.*, 1893).

SOME SOURCES OF ERROR IN PHOSPHORUS DETERMINATIONS.

BY ALEX. G. MCKENNA.

WE have found that we get lower results in phosphorus by the method of oxidation with permanganate than by evaporation to dryness when the sample is "chilled iron."

With steels or ordinary pig-iron borings the results by the two methods agree. When chilled samples are used it is impossible to destroy entirely the color due to combined carbon, and we have therefore attributed low results to incomplete oxidation of the phosphorus as well as the carbon compounds. I enclose some of our results confirming the above statements.

Our method *by permanganate* is as follows: Dissolve 1.63 grms. sample in 60 c.c. HNO_3 (1.13 Sp. Gr.); boil; filter; bring to boil; add $KMnO_4$, until a red color persists for a minute or two; boil five minutes, until excess of permanganate is decomposed, leaving the brown precipitate of MnO_2; add $FeSO_4$ till MnO_2 dissolves; add 5 c.c. NH_4OH; heat to 80° C.; add 60 c.c. molybdate solution (Wood's formula); stir 5 minutes; filter; wash with 2 per cent. HNO_3, and finally with 1 per cent. KNO_3 solu-

tion; dissolve yellow precipitate in NaOH and titrate excess with HNO_3, using phenolpthalein as indicator.

By evaporation our method is: Dissolve 1.63 grms. in 40 c.c. HNO_3 (1.20 Sp. Gr.); evaporate to hard dryness in evaporating dish with inverted watch-glass cover; burn for 20 minutes; add 8–10 c.c. HCl; evaporate to dryness; add again 8–10 c.c. HCl, and heat till all iron is in solution; now add 40 c.c. HNO_3 (1.40 Sp. Gr.), and boil down to 15–20 c.c., or until all HCl is driven off; dilute with H_2O; filter; partly neutralize with NH_4OH, and precipitate as above.

Our chilled samples are taken by dropping the molten metal from a small ladle into a bucket of water. These shot are then crushed into a fine powder.

These results are on samples taken from different furnaces at random.

	By $KMnO_4$.	By Evaporation.
Chilled sample No. 1,	.086	.099
" 2,	.091	.107
" 3,	.094	.107
" 4,	.083	.092
" 5,	.089	.097
" 6,	.080	.090
" 7,	.081	.090
" 8,	.081	.088
" 9,	.081	.092
" 10,	.087	.093
" 11,	.081	.091
" 12,	.082	.095
" 13,	.091	.100
" 14,	.084	.093
" 15,	.081	.091
" 16,	.088	.094
Steel sample No. 1,	.096	.097
" 2,	.101	.098
" 3,	.077	.078
Iron drillings (not chilled) No. 1,	.094	.095
" " 2,	.094	.093
" " 3,	.089	.088

In regard to *effect of allowing the solution of the yellow precipitate in alkali to stand exposed to the air for any considerable time* it doubtless leads to high results.

10 c.c. of soda solution after standing for two hours required 9.5 c.c. HNO_3 solution to neutralize it, while 10 c.c. of the same solution on being titrated at once required 10 c.c.

This made a difference of .006 per cent. P. in our results.

SOME APPLICATIONS OF NATURAL GAS IN CHEMICAL WORK.

BY FRANCIS C. PHILLIPS, PH.D.

I THINK that the usefulness of natural gas in chemical work is not generally appreciated. I can testify to the good effects of a natural gas stream in hastening precipitations by the method Mr. Carnahan has proposed.

But besides its use in agitating a liquid, natural gas forms a convenient substitute for carbon dioxide or nitrogen in many cases where an inert gas is necessary. In drying substances liable to oxidation if exposed to air, I have often used a natural gas stream. The substance to be dried can be placed in a flask which is heated over a water-bath and gas passed slowly through the flask.

As natural gas does not exert any reducing action at moderate temperatures, it is usually quite as well suited for such a purpose as pure nitrogen. It is a common practice in distilling organic liquids of high boiling point to send a current of steam through the still to expel the heavy vapors and hasten the distillation. I have found that natural gas serves better than steam, and it is, of course, much more easily controlled.

Sulphur compounds may, and probably do, occur in natural gas, but in such small quantity that ordinary reagents fail to give any indications even when several hundred cubic feet of gas are used. With the increase in heavy hydrocarbons that has been observed during the past two years, it is probable there has been a somewhat greater proportion of sulphur compounds. Whether this is a coincidence or not I cannot say.

I have found in two instances that the gas supplied in Allegheny when burning would yield a trace of sulphurous acid. By a trace I mean a quantity much smaller than is found in ordinary coal gas and far too small to affect the value of natural gas for any technical purpose.

PRECIPITATION BY AIR OR GAS BLAST.

BY R. B. CARNAHAN, JR.

A VERY convenient way of precipitating phosphorus in iron and steel is to agitate the fluid by blowing through it a stream of air or natural gas. With a fairly good pressure precipitation is complete in from 2 to 3 minutes, with any percentage of phosphorus.

By using this method of precipitation I have succeeded in getting very accurate results in phosphorus in steels in 12 minutes.

Adjourned.

J. O. HANDY,
Secretary C. S.

SEPTEMBER 19TH, 1893.

THE regular meeting of the Society was held in the lecture room of the Academy of Science and Art, on September 19, 1893.

Vice-President, Thomas H. Johnson in the chair. Forty-one members were present. The minutes of the last meeting, June, were read and approved.

On motion the chair having appointed Messrs. Swensson and Lewis as tellers, the following applicants were elected to membership:

F. G. Hagar, C. E.; C. G. Lidbeck, Mech. E.; William W. Jamison, C. E.; R. G. G. Moldenke, Ph.D., Metal. E.; Charles Johnson, C. E.; C. A. P. Turner, C. E.

Mr. H. J. Lewis, for the Committee on Library reported that sixty-one volumes had been added to the Library since the May report.

Mr. G. S. Davison, for the Reception Committee, reported the

arrangements made for the entertainment of the French engineers who will visit Pittsburg as the guests of the Society, on September 21st, 22d, 23d.

Mr. Koch's paper on "Gas and Gas-Producers" was discussed by Mr. Koch, Mr. Estrada, and Dr. Phillips.

Mr. Estrada's paper on "The Effect of Suddenly Applied Loads on Iron and Steel," etc., was then discussed by Mr. Thomas H. Johnson, Mr. Estrada, Mr. Koch, and others.

At the request of the chair, Mr. Charles Hyde described his Water-Tube Safety Boiler, illustrating his remarks by a working model of it.

Discussion of Mr. Koch's Paper.

The Chairman: The discussion is now open for the two papers read at our last meeting, one on the subject of "Gas and Gas-Producers," by Mr. Walter E. Koch, and the other on the subject of "The Effect of Suddenly Applied Loads Upon the Tensile Strength and Other Physical Properties of Wrought-Iron and Steel," by Mr. E. D. Estrada. Mr. Koch's paper being the first one read we will now proceed to the discussion of it.

Mr. Koch: Mr. Chairman, I have received some very interesting remarks from one who is well qualified to make them, Dr. A. Hennin, of Springfield, Ill., and if it is in order I would like to read them to the Society. While personally I do not agree with everything he says, his remarks are very pertinent.

Dr. A. Hennin, member A. I. M. E., Springfield, Ill., communicated: Although the division of the fuel bed of a gas-producer into three different zones, as presented by Mr. W. E. Koch, is the one generally admitted to demonstrate the working, it does not represent the true facts of the case.

According to my observations, the temperature varies, in the lowest zone of a producer in operation, from cool ash, to the lowest point of combustion, about 900° F.

At this point, the oxygen of the air attacks the carbon and forms CO_2 and CO in variable proportion, according to the speed of combustion. In a slow combustion producer, little or no CO is formed at the start.

At about 1000° F. the decomposition of steam begins with formation of CO_2 and H ; it becomes considerable at 1750° F.

CO_2 partly carbonizes at 1440° F.

With proper speed of combustion and proper proportion of air and steam, the temperature soon reaches 1900° F. (orange tint.) At this point, low pressure steam, perfectly diffused through the incandescent coke properly broken, is completely decomposed and the proportion of CO_2 in the gas is at a minimum.

The proportion of CO_2 to CO depends largely upon the depth of the incandescent bed lying between 1900° F. and 1440° F.

In good practice, the reactions between carbon and oxygen and carbon and water are complete in this zone.

If there is no excess or ingress of air, a proper proportion of steam and a perfect diffusion of both, the gas will leave the zone free from CO_2 and free from steam.

In this zone also takes place synthetical formation of ammonia proportionate to the percentage of nascent hydrogen brought in contact with the nitrogen liberated from the coal.

If any steam, through bad diffusion or excess, reaches the zone immediately above 1440° F., it may still be decomposed and produce also ammonia as well as H, but there will be formation of CO_2 only, and it will be found as such in the gas.

In fact it is impossible to separate a zone of combustion from a zone of carbonization in the manner described by Mr. Koch. The different reactions take place in more or less proportion from cherry-red heat to orange tint heat and in many instances they are almost simultaneous.

In the line above cherry-red (1440° F.) to the top of the fuel bed, the operation assumes a character similar to the distillation of coal in retort for illuminating gas, and is accompanied by the same phenomena ; 1st, liberation of the volatile products composed of considerable hydro-carbon vapors, ammoniacal water and permanent gas ; 2d, decomposition of the vapors and pyrogenous reactions.

The products of this zone are very valuable; they give radiating power to the flame and add considerably to the heating value of the gas. Not only do they increase the percentage of H, CO,

CH_4 and C_2H_4, but they bring also a certain quantity of hydro-carbon vapors, not easily condensed even at a low temperature, such as diacetylene, benzine and homologous products of great luminosity, which are not usually determined in analysis, but which exist nevertheless and have a remarkable influence upon the heating power of the gas. These products will vary in quantity and efficiency with the temperature of distillation, the pressure in the producer, and the velocity with which the gas is taken off.

I admit with Mr. Koch, that the tar is a source of annoyance in the flues, valves, and checkers, and even that its value as a combustible in heating furnaces, considering the conditions required for its complete combustion, is, to say the least, very problematical, but tar must be removed from a good producer-gas and find a market as such.

Far from avoiding the formation of the other hydro-carbons I would promote their production by all means. I would consider as one of the greatest achievements in the art of producing fuel-gas, the transformation of any considerable portion of the fixed carbon of the coal into hydro-carbon.

Although very delicate ones, synthetical combinations, direct or indirect between carbon and hydrogen, do not seem impossible, and we should devote our energy to that result.

On the other hand, the dissociation of the hydro-carbons other than tar, into hydrogen and soot in the regenerators can be avoided. The phenomena pointed out by Mr. Koch, does not take place to any appreciable extent unless at excessive temperature in presence of oxygen or a large percentage of steam.

Between 1000° F. and 1700° F. we get the following reactions:

$$C_2H_4 + 2O = 2CO + 4H.$$
$$C_2H_4 + 4O = 2CO_2 + 4H.$$

With a small separation of carbon in both cases, it is true; but the inverse reaction occurs also in the checkers. At the proper temperature the Co_2 formed by the second equation, coming in contact with the carbon deposited, will transform into 2CO.

In the absence of steam, or oxygen, and in the presence of hydrogen, the hydro-carbons at atmospheric pressure or below, will simply pass from one series to another and reach the furnaces when they will signal their presence by the luminosity and high radiating power of the flames.

Mr. Koch holds that a highly hydrogenated gas is undesirable, and limits to 20 per cent. the percentage of hydrogen in a good gas. That opinion has been advanced many times, but does not seem to stand. The proportion of hydrogen in the producer-gas does not show any material difference in the length of the flame. It increases it in calorific intensity with the increased ratio of hydrogen, but the uniformity of heating is not affected.

On the other hand, the hydrogen, according to no less an authority than Sir Lowthian Bell, reduces the iron oxide far more energetically than carbon monoxide does. It produces water by combustion, it is true; but is the water produced by the combustion of the hydrogen in condition to oxidize metal as moist gas, for instance, does? I believe not. The product of combustion of hydrogen at the intense heat of its formation appears to be in the state of equilibrium described by Sainte Claire Deville, the distinguished chemist of the Compagnie Parisienne du Gas, and does not possess, in that state, the physical and chemical properties of water until it leaves the highly heated atmosphere of the furnace, or comes in contact with a cold surface. On the same ground, the objection against high percentage of hydrogen may just as well be applied to the carbon monoxide for the product of its combustion, CO_2, also energetically oxidizes the metal. But it seems to me conclusive from practical demonstration, that not only hydrogenated producer-gas does not oxidize the metal more than the ordinary producer-gas, but on the contrary that it oxidizes less, and considerably less, than the so-called oil-gas; a mixture of vapor and steam.

Our aim should be to produce a gas as high in hydrogen as it can possibly be got in economical conditions, by continuous process. The more hydrogen in the gas, the less nitrogen and the less proportion of air required for combustion.

It is true, as Mr. Koch remarks, that steam is used too wet, and

often in excess in ordinary practice, and he may have added, not properly diffused. The diffusion of air and steam in the fuel-bed is one of the most important points, and such a diffusion to be perfect, must be operated at low pressure and high temperature.

The proportion of air and steam should be constantly under easy control, aiming at a high speed of combustion with the largest possible proportion of steam consistent with the requisite furnace heat to obtain a complete decomposition.

The amount of lost heat, everybody must admit, is excessive in ordinary producer practice, but not necessarily so.

With the proper plant and directions, it is possible to produce regularly gas with a comparatively small percentage of waste heat, not exceeding 15 per cent. of the energy of the coal consumed, if the furnace heat is properly utilized for decomposition of steam, and consequent reduction of the sensible heat of the gas.

The large percentage of heat ordinarily lost through the brick work, as well as the sensible heat of the gas, may be partially recovered by utilizing it for heating the air and superheating the steam.

It is also possible, by operating with a partial vacuum in the producer, to decompose the coal more rapidly, increase the yield of the volatile products in the upper part of the producer and obtain at a reduced temperature the reactions between carbon and steam; and therefore increase the percentage of combustible matter in a given volume of gas.

The gas can be delivered through pipes at any reasonable distance in a comparative state of purity. It can also be made at a very low cost by saving the tar and ammonia and possibly other products; but in my opinion, the proper use of the gas in the furnaces, the loss of sensible heat in waste gas by radiation, by excessive supply of air or unnecessary deficiency of it through leakage of furnaces, valves, defective flues and checkers, will always keep us far from the theoretical fuel consumption indicated by Mr. Koch's thermal equations.

Mr. Koch: Now that is what he wrote to me, and then I wrote to him about temperatures and I have a reply from him here which I will read, which I also think important, and to which I would like to call the attention of the Society.

Dr. Hennin writes: "I have been using the optical pyrometer of Nouel and Mesuré in connection with the Pouillet scale of tints. The apparatus gives satisfactory results, approximating closely to the temperatures of the melting points of sulphur, gold and platinum given by M. Le Chatelier. Cherry-red corresponds to 800° C. and orange tint to 1100° C. I have compared my results with those of leading authorities in the bituminous shale industry of Scotland where the temperature has great effect on the products and I am satisfied that my observations are very nearly correct."

Perhaps there are some here to-night who can help us out on this subject of temperature; for instance, what do we really know about high temperatures, what is the true temperature of melting copper? I have found the melting point of pieces of copper of the same dimension, weight and chemical composition to vary widely. We talk about light red, orange tint, etc., but what does it really all mean? We need a solid mathematical base for high temperatures or thermal equations are of small value.

There are good producers here in Pittsburg, and there is a producer in our mill which up to the present time I believe to be the best one we know of, still the results are not altogether what I would like. This fuel question is an important one, and while the results of the producers we have are unsatisfactory, they are better than they used to be, but we cannot hope to do much until we know more about the subject of temperatures and the reactions of gases at higher temperatures. I think that Prof. Phillips could tell us something on this subject.

Prof. F. C. Phillips: Why do you prefer hydrogen to hydrocarbons for fuel? Mr. Koch replied that hydrogen made a good clean gas and seemed to prevent deposition, besides three was its high calorific value.

Mr. E. D. Estrada: Will Mr. Koch give any figures as to how much material is used in the conversion of a ton of coal into 130,000 cubic feet of gas?

I have visited several gas-producing plants, where they use oil, coke, water, coal, etc., in the production of gas, but have not been able to ascertain the amount of these ingredients, used for the production of a given amount of gas of certain quality.

Unless we know this, I do not see how the efficiency of different producers can be compared.

MR. KOCH: I haven't the exact figures at hand, but I was calculating the other day the cost of making gas by the water and oil processes, and find that they are expensive. Producer-gas can be made for about, I think, two cents per thousand feet including labor.

MR. ESTRADA: Does this include the other materials besides coal?

MR. KOCH: That includes coal, steam and labor, making I think, the lowest cost about two cents per thousand; from that up to four cents, but I am quite sure it can be made for two cents per thousand from Pittsburg coal.

MR. ESTRADA: You are the first one who has given me the figure of cost.

MR. KOCH: It takes a ton of coal to make the gas and about 10 per cent. additional coal to make the steam.

DISCUSSION OF MR. ESTRADA'S PAPER.

THE CHAIRMAN: The next in order is the discussion of Mr. Estrada's paper. To open the discussion I will give a summary of the contents of his paper read at our June meeting. Mr. Estrada made a series of experiments with a drop machine, in which strains of tension were produced by the falling of a hammer after the manner of a pile-driver. He made in all something like forty-seven tests on some eight or ten different brands of iron and steel.

Some of the specimens from each group were tested in his drop machine, and kindred samples were tested by him in a screw machine. The same inspector tested samples taken from the same rolled bars of steel or iron by different methods: the personal equation is eliminated; the methods of test only are under consideration.

The direct results of these tests show greater elongation by the drop test than by the screw machine. This also, no matter what the temperature was, whether cold or warm.

At temperatures in the neighborhood of zero F. he still obtained greater elongation in the drop test than in the screw machine. This point is a little at variance with the teachings of our text-

books, because we are taught to believe that the deformation of a piece of metal, under sudden strain involves a flow of molecules, which requires time; and we were led to believe that where time is eliminated and the blow is instantaneous, that the flow cannot take place and the piece will break at a lower strain, and with less deformation. Mr. Estrada's tests clearly show that this is not the case; that the elongation is greater under an instantaneous blow of the drop machine than in the more quiet and steady pull of the screw machine. It is worthy of note, however, that while the elongations are greater, there is no such marked difference in the reduction of area, in the two modes of testing. The screw machine, while giving less general elongation of the whole specimen, gives greater local contraction at the point of rupture, and thus makes the actual area at point of rupture very nearly the same in both cases.

The most striking point, however, of this paper, was the relation of the elastic limit to the ultimate strength. With the drop test more or less permanent set was obtained by the first blow of the hammer, or, in other words, the elastic limit is reduced to but little above zero, and the lesson brought out in the paper is that the so-called elastic limit is not a property of the material, but is really the result of the conditions under which the test load is applied, and may be varied within very wide limits under different conditions of tests.

In series "F" of his tests there is one point which I would like particularly to enforce upon the attention of our members; these tests were made from two of the bolts in his own drop machine after a service covering over fifty tests. They were removed from the machine, one of them tested in the drop machine and the other in the screw machine, with the following results. Where the screw showed an elongation of 27 per cent. the drop test showed an elongation of only 20 per cent.; reduction of area in the screw machine 41.6 per cent., and in the drop test only 24.5 per cent.; and whereas, corresponding material in other groups showed under the drop test an ultimate strength ranging from 30,000 to 36,000 foot-pounds per square inch, these bolts showed only 16,000 foot-pounds; and in the screw test it showed on ultimate strength of

50,000 pounds per square inch as against 48,000 to 51,000 pounds for corresponding material in other groups. In other words, the drop test shows very decidedly the influence of the previous work which the bolts had undergone in the drop machine, while the screw test does not show it. That indicates a very important point in the application of this drop test, which, when followed out further, I hope will enable us to determine something about the life of an iron structure, and to ascertain the actual safe or unsafe condition of existing structures after a term of service. I regard that point as a very important one. True, this is a single test in each case, but the difference is so striking, so remarkable that I cannot but regard it as the starting-point of a new feature in our knowledge of material.

Mr. Koch: I think Mr. Estrada's method the proper one. In regard to this table "F," there is a great deal in it that is new to us all, and I have been in the iron and steel business for the best part of twenty-five years. In this table our attention is called to the fact that the elongation on the impact machine was 1.60, and with the screw machine it gave 2.16; this is a very big difference; was this iron or steel?

Mr. Estrada: Iron.

Mr. Koch: I do not like the pull test at all, everybody gets a different result. Here is a half-inch plate sent down to be tested; in the first place we tested it ourselves; the specifications called for over 55,000 pounds; we made it 57,000 in our machine; we shipped this plate to the railroad company, and they shipped it back, stating that it was under 55,000. We thought we would try to find out more about this, so we sent samples from it to one manufacturer, whom we will call "A," and he made it 53,000; we then sent a sample to another, whom we will call "B," and he made it 57,000; we then sent a sample to another, who made it 53,000, and another place made it 57,000. These are beautiful results from six different works, each of which thought they had a perfect machine.

I think Mr. Estrada's method of testing a great deal better than the pull machine. It is the right way to test, because it is the way in which iron and steel are subject to in bridges and buildings where they have to withstand shocks.

Take a boiler under steam, many think it is a gradual and even pressure all over, but I do not believe it; when a boiler is under steam I believe it receives a succession of shocks, but we are limited in our observations to reading of the gauges on our boilers; they do not indicate strains, so we cannot ascertain them; but with Mr. Estrada's machine we get a better idea of what has taken place with iron and steel subjected to work, than we do with our present pulling machines.

MR. EMIL SWENSSON: Some time ago a French engineer, Mr. Paul Debray, who passed through this city, and who is particularly interested in testing of materials and uniform methods therefor, remarked: "What elastic limit do you refer to?" when in a conversation on the subject of testing I made use of the term "elastic limit." I explained what we meant by the expression in everyday practice. He then told me that in France they recognize three distinct different elastic limits, dependent upon different conditions of loading, etc. Their definition, as understood by the French engineer, has never been explained to me.

THE CHAIRMAN: If I understand Mr. Estrada's diagram on page 18, I think you could get an infinite number of elastic limits, and that it would vary according to the amount of energy converted into heat during the stretch of the piece.

MR. KOCH: I would like to ask Mr. Estrada if he made any tests with snow and ice around the piece.

MR. ESTRADA: No, but I made them with the machine in the open air with the temperature at three degrees below zero; and also used sal ammoniac and ice when the atmospheric temperature was not so low. Some of the experiments were made last January, during the very cold weather we had then. I consider that better than sal ammoniac and ice in summer, when the test-piece cannot be made so uniformly cold as in winter.

I have received a "marked copy" of the *Engineering Record*, for September 9th, containing an editorial wherein the accuracy of my conclusions is seriously doubted, particularly in regard to those concerning the elastic limit. The editorial writer says that, as a matter of fact, the results of the tests exhibit no positive evidence whatever on which my conclusions can be based, and simply for the reason that the elastic resilience of the $\frac{5}{8}$ Rd.

wrought-iron bars is scarcely 30 inch-pounds, while the 100-pound weight in no instance dropped less than one foot.

I cannot see how the fact that the elastic resilience is only about 30 inch-pounds contradicts in the least my statement about the elastic limit. By the elastic resilience is understood the quantity of work which is required to be expended in stretching a prismatic body within the elastic limit by a gradually increasing load, and thus lengthening it a certain amount. If the elastic limit is not exceeded, the measure of the work will be the product of the total extension in units of length and the mean value of the load in pounds. It is obvious, therefore, that in order to measure the elastic resilience the stretch must be considered while the rod is under stress; while with the drop test the elongations given were not taken while the rods were under stress, but were merely permanent sets. Thus it will be seen that the two cases are entirely different, and my statement cannot be refuted by saying that the resilience of the rods was only about 30 inch-pounds.

Had the writer of the article read the paper carefully he would have noticed on page 21 of the paper, where I said: "An examination of the tables here given, containing the effect produced by each drop, shows that in many cases a drop of two feet was sufficient to obtain a permanent set, and, it is likely, that with more accurate means to measure the effect a drop of one foot, and even less, would have been sufficient to have reached the elastic limit." This could not be interpreted to mean that the elastic limit in such cases was 200 foot-pounds, nor that the resilience was 2400 inch-pounds.

Why did the writer not confine his remarks to the elastic limit? My experiments have nothing to do with resilience, nor can it be figured from the results given.

In regard to the increase in elongation produced by the impact test over that produced by the screw machine test, the article in question says: "As to the increased stretch under impact over that produced by a static load, we seriously doubt the accuracy of his conclusion. Other most careful experimenters have been led to opposite results, and, besides that, inasmuch as the number of

impacts required in some cases to produce rupture was sixteen, it is probable that the time consumed in one such test may have been even more than that required for a static test."

My conclusions were not arrived at from anything else but facts. No one would doubt that the loads with the drop machine were suddenly applied, while with the screw machine they were gradually applied. The determination of the corresponding elongations for the two machines is an easy matter, as it only requires a scale divided into inches and fractions of an inch to establish the fact. Plate 2 shows the fact that the drop test gave greater elongations than the screw test, and further argument is useless. Because, in one instance, it took 16 drops to break a piece, does not change the fact that the loads were suddenly applied. Because other most careful experimenters have arrived at different conclusions is no argument to show that I should arrive at the same conclusions. Who were these careful experimenters? The only experiments on suddenly applied loads that I know of are those of Kirkaldy, in which the loads were applied at the end of an elastic lever 16 feet long, and without any attempt to include the element of shock or impact. His results, therefore, cannot be compared with mine.

THE CHAIRMAN: Mr. Charles Hyde has a working model of a steam boiler here, which he will now present to our attention.

WATER-TUBE SAFETY BOILER.

MR. CHARLES HYDE: One of the most important requirements of a successful steam boiler is that a steady circulation be maintained from the first moment heat is applied, in order to prevent unequal expansion, and consequent strain, in the structure of the boiler, which may frequently amount to a destructive strain before there is any steam pressure in the boiler at all, the effects becoming apparent in an explosion at a much lower pressure than it was designed to carry.

The proper circulation of water in a steam boiler is of as much importance to its life and usefulness as is the circulation of the blood to the life and health of the animal creation. To be effective, too, it is as necessary, in one case as the other, that the circu-

lation should be constant, regular and positive; not dependent upon the most favorable conditions for its existence, but capable of being maintained under rapidly varying conditions of temperature, pressure and general environment. The circulation of the water does not depend, to anything like the extent as is generally assumed, upon any difference in temperature of the ascending and descending columns of water, which should be practically the same, in every part of the boiler, if the circulation is perfect. Yet the parts most exposed to the heat; the water separated from the heat by the least thickness of metal, and the water most minutely divided and most completely surrounded by hot gases must necessarily absorb the most heat. This is absolutely true, but the water does not, of necessity, become hotter. The excess of heat converts a portion of the water into steam, rendering a large amount of heat latent, or insensible to the thermometer, still leaving the temperature of both steam and water the same, provided the pressure remains constant. The circulation, then, is mainly caused by the difference in specific gravity of a column of water full of steam bubbles, "light as air," and a column of solid water from which the steam bubbles have freed themselves. The bubbles, rising to the surface, carry along with them a current of water, which in turn sinks down when freed from steam, and is again heated, a further portion being converted into steam as it passes through the heated zone of the boiler. Circulation should, and of course does, in a properly constructed boiler, begin as soon as heat is applied to it, and, in this case, before the formation of steam bubbles, the circulation is due to the difference in temperature of the water in different parts of the boiler, and is, consequently, but slow as compared with that when steam is forming rapidly, but circulation is, nevertheless, of the utmost importance at this time, as unless there is circulation now, the temperature may range from the boiling point, in one part of the boiler, to absolutely cold in another, so inducing the strains already referred to.

It is readily seen from the mere statement of the causes of circulation, that its proper maintenance involves some provision for the steam bubbles of the ascending column of water to free them-

selves from the water, upon reaching the surface, leaving the water free to return and be reheated, so completing the circuit. This separation is largely a mechanical one, and depends, for the most part, upon the provision of a large water surface, or technically "disengaging" surface, from which the steam may rise freely without carrying entrained water. For, just as circulation is essential to the life of a boiler, so is dry steam to the life and successful operation of an engine. The engine and boiler really form a unit and each must be designed with regard to the requirements and capabilities of the other. A boiler should not be called upon to furnish more than a certain quantity of steam, per foot of disengaging surface, in a given time, nor should the engine draw so rapidly from the accumulated store of steam in the boiler as to suddenly reduce the pressure, so causing a more rapid disengaging of the steam than can be properly accommodated by the surface provided, and resulting in wet steam being given off. This is merely another way of stating that the disengaging surface should be ample for the work it has to do, and the steam space of sufficient capacity to supply any sudden draught of the engine without materially reducing the pressure in the boiler, both of which are points to be carefully considered, and allowed for, in the design of a successful steam boiler.

Since the function of a boiler is merely to convert the energy stored up in heat into an available form for use, it follows that heat derived from any source is equally applicable, provided there are no practical objections to its utilization. Much of the heat now going to waste in our rolling mills might be converted into work, provided the operators were satisfied that the means of conversion could be made simple and safe; and also that the gain in one direction might not be more than offset by delays caused by accidents to the boiler, or by the checking of the draught, and consequent reduction of furnace output. These also are points for careful consideration, though it seems well within the bounds of possibility that a boiler could be designed, in the light of past experience and a more complete knowledge of underlying principles, which should, at one and the same time, prove efficient and safe as a steam generator, whilst utilizing without involving

other drawbacks, the heat now going to waste, and which represents a loss of power, and consequently, of wealth, to the community.

The water-tube system of construction appears to embody more of the most desirable features of a steam boiler than any other, more particularly as regards safety, economy and good circulation, whilst other very important points, such as dry steam and a large steam area can be and are arranged for when their importance is properly appreciated. For the utilization of waste heat the vertical type of water-tube boiler affords advantages, as affecting less prejudicially than any other, the proper working of a puddling or heating furnace, and it would seem that in this direction, with careful provision for circulation and the generation of dry steam the boiler best adapted for the utilization of waste heat is to be found.

The working model of a steam boiler which I wish to introduce to your notice to-night represents a boiler in which it has been attempted to combine the principal requirements of a serviceable boiler, as briefly set forth in the foregoing. You will observe that the portion of the boiler most exposed to the heat consists of tubes of small diameter, and consequently of thin material, which allow the heat from the hot gases, which completely surround the tubes, to be readily absorbed by the water contained in the tubes, rapidly converting same into steam. A very small addition of heat to this water starts the circulation as illustrated by the model, the circulation becoming very rapid when steam commences to form. The volume of water in the central column being much greater than that in the tubes, and protected by the tubes from the impinging heat is not converted into steam to any practical extent (especially when it is considered that the feed water is injected into the boiler down this column, as shown clearly in cut No. 1, which tends to check steam generated still further), consequently it slowly settles down to take the place of the water converted into steam in the tubes, and so maintains a continuous circulation throughout the boiler. The arrangement permits of a large disengaging surface, proportioned to the amount of steam likely to be generated, and also of a large steam space,

Fig. 1.

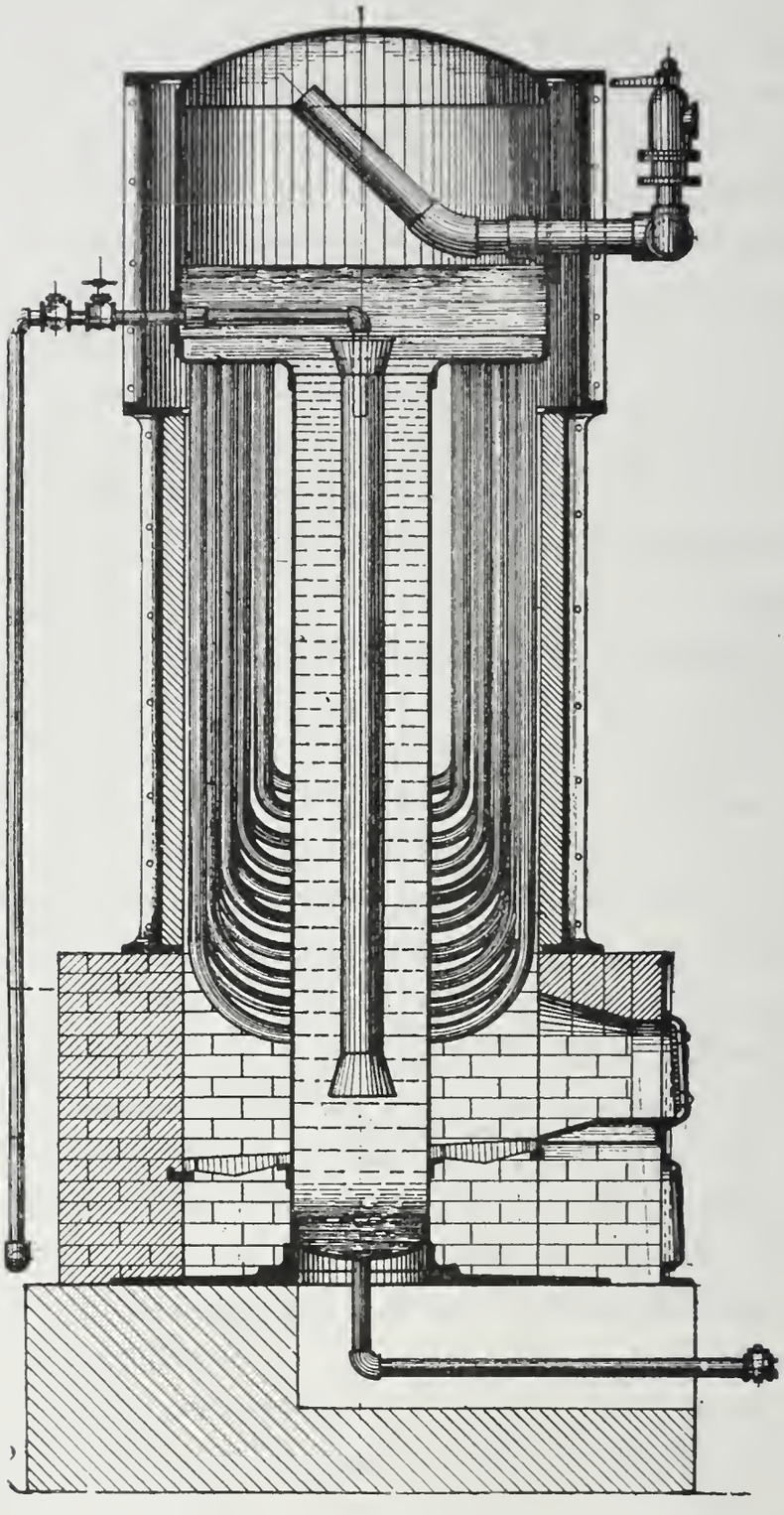

Fig. 2.

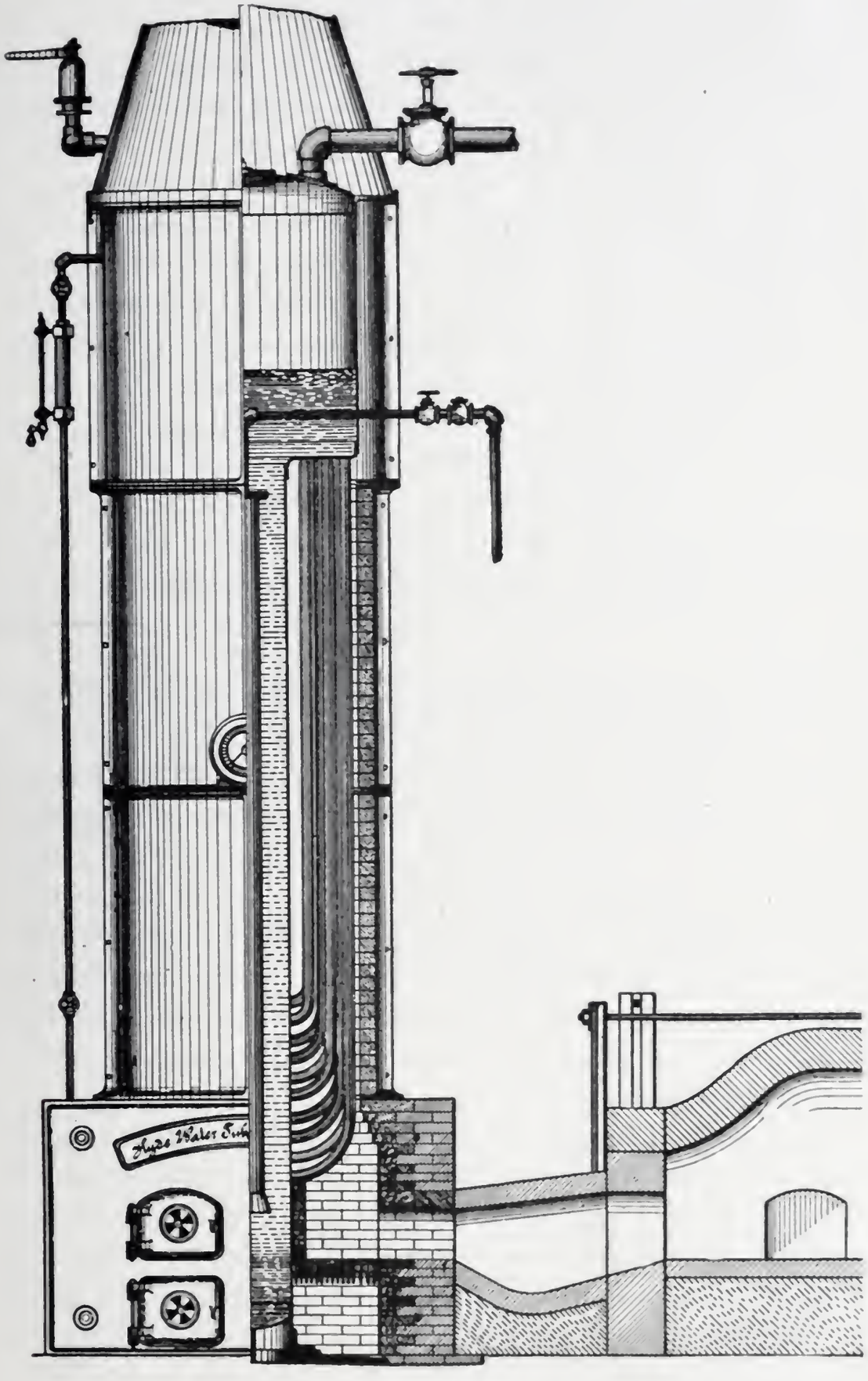

or storage reservoir, capable of withstanding any sudden draught from the engine, and still maintain a steady pressure.

From the method of feeding and from the natural direction of the circulating water, viz., up the tubes and down the central column it will be readily observed that any matter in suspension would tend to settle to the bottom of the central column, and it is at this point, therefore, that the blow-off pipe is attached. The boiler is usually surrounded by a cast-iron sectional casing lined with fire-brick, which is at once neat, compact and readily removable, should it become necessary to replace any of the tubes.

Fig. 1 represents the boiler as arranged for direct firing and of a reduced height, for use in the basement of buildings, etc., where head-room is somewhat limited.

Fig. 2 represents the boiler arranged for the use of waste-heat from a heating-furnace, though, should it be desired to fire direct, it is merely necessary to romove the tile from the grate bars and place a few bricks in the furnace flue, to render it at once a direct-fired boiler.

That the heat is pretty effectually absorbed, proving the economical working of the boiler, was shown by a stack temperature of less than 450° F., being obtained when two puddling furnaces were discharging into one boiler setting, whilst the steam generated showed some degrees of super-heat, the above results being obtained in connection with a boiler in operation at the works of the Ætna-Standard Iron and Steel Company, Bridgeport, Ohio, where some 125 H. P. is being developed from the heat formerly going to waste, and without interfering with the proper working of the furnaces to which it is attached, and to which the setting practically forms the stack.

One feature of interest is illustrated by the model I should like to point out, viz., that should the boiler be neglected and the water be allowed to fall below the tube sheet, the circulation still continues, the water rising in the tubes, flowing over the tube sheet and down the centre column, so protecting the surfaces and preventing the possibility of overheating the tubes or plates. It is manifestly impossible to observe the circulation in practice in the same way as in the model before you, yet it is reasonable to

assume that the conditions being similar, the results would be practically the same, especially when all the observable results are so strongly analogous in practice to those shown in the working model.

Adjourned.

R. N. CLARK,
Secretary.

MEETING OF THE CHEMICAL SECTION.

SEPTEMBER 26TH, 1893.

Mr. Joseph H. Eastwick, Chairman; Mr. James O. Handy, Secretary.

Twenty-five persons present.

Remarks on "Standard Methods for Sampling and Analysis of Iron and Steel" were made by Mr. W. E. Koch and Mr. James Camp.

Mr. Handy read a paper on "The Effects of Arsenic on Phosphorus Estimation in Iron and Steel."*

On motion of Mr. James Camp the Section voted to "request the Board of Direction to publish the Standard Methods for Analysis of Iron and Steel, as issued by the Pennsylvania Railroad Company."

STANDARD METHODS OF SAMPLING.—REMARKS.

MR. JAMES M. CAMP: Segregation is especially noticed in a large ingot of steel. If one is rolled down to 4-inch by 4-inch section, and drillings taken for a depth of one-half inch, the sample will fairly represent the ingot. Drillings must be fine and well mixed.

---

* Mr. Handy's paper is withheld for later publication with additions.

MR. W. E. KOCH: When drillings from a steel ingot, in which segregation has taken place, are shaken up together, a mechanical separation takes place corresponding fairly well with the chemical composition of the particles which separate. It is very difficult to mix drillings and keep them mixed. Chemists are not at fault as often as sampling is.

STANDARD METHODS OF ANALYSIS.—REMARKS.

MR. JAMES M. CAMP: Chemists sometimes disagree when working on two samples which are exactly alike. The fault must then be one of difference of method or of manipulation.

MR. J. O. HANDY: We cannot always explain differences of results obtained by chemists who analyze parts of the same sample by saying that their methods are different. They may be using *nominally* the same method, but *in reality*, differing in detail and obtaining divergent results.

I have known two chemists to work conscientiously on the same sample by *exactly the same* method so far as they could judge, and yet disagree. Of course their methods must have differed at some point, but owing to their imperfect descriptions they were not able to detect their difference.

I therefore commend Dr. C. B. Dudley's *detailed descriptions* of the methods of analysis which he proposes as "Standards."

Brief descriptions of methods are sufficient only for experienced chemists, and a list of special precautions is always desirable.

A standard method of analysis should, however, be the simplest known method, of which the accuracy has been fully tested. Busy people should not be forced to do unnecessary work.

Adjourned.

JAMES O. HANDY,
Secretary C. S.

October 17th, 1893.

The Regular Meeting of the Society was held in the lecture room of the Academy of Science and Art, at 8 p.m.

In the absence of the President, Mr. Thos. H. Johnson, Vice-President was in the chair. In the absence of the Secretary, Mr. James H. Harlow, past Secretary, acted as Secretary. Thirty-four members were present. The minutes of the last meeting were read and approved.

Messrs. Charles Davis and J. A. Camp having been appointed tellers, the following applicants were elected to membership: A. S. Drosdov and Leon de Pontois.

Mr. Geo. S. Davison, chairman of Committee on Reception, made the following report on entertaining the French Engineers during their visit in Pittsburg, September 21st–23d.

Report of the Reception Committee.

The Reception Committee of the Engineers' Society of Western Pennsylvania, to whom was entrusted the arrangements for the entertainment of the French Engineers, would respectfully report that the committee has performed its duty in this direction as well as circumstances would permit. The visitors arrived by special train on Thursday evening, September 21st. An informal reception was held after their arrival at the Monongahela House, and from that time until the Saturday evening following they continued to be the guests of the Society and its friends.

From all appearances the entire affair was a success, and we believe the efforts made by us to entertain our guests were fully appreciated by them.

The committee is preparing a full account of its work, and will have the same bound and placed on the shelves of the library.

It gives the committee great pleasure to further report that the financial arrangements were so perfect that a balance is in the hands of the committee. With it the committee will purchase books for our library.

A quantity of wines that remained from the excursions were

sent to the Allegheny General Hospital, in return for which a letter of thanks has been received.

The committee hereby extend their thanks to the members of the Society and their friends who added to the enjoyment of the occasion.

The chairman was instructed to offer the following resolution to the Society :

Resolved, That, through letters from the Secretary, and endorsed by our President, a vote of thanks of this Society be extended to the following firms and persons who so generously aided us in entertaining the visiting French engineers :

Chamber of Commerce Committee, A. J. Logan, Chairman ; Pennsylvania Railroad, Robert Pitcairn, General Agent ; Pennsylvania lines west of Pittsburg, Joseph Wood, General Manager, J. J. Turner, Superintendent ; Pittsburg Consolidated Coal Company ; Forest Oil Company, W. J. Young, Vice President, E. E. Crocker, Superintendent ; Frank Kneeland Machine Company ; Hecla Coke Company ; W. L. Mellon Pipe Line ; Carnegie Steel Company ; H. C. Frick Coke Company ; McConway & Torley Company ; Pennsylvania Lead Company ; Philadelphia Company ; Westinghouse Air-Brake Company ; Westinghouse Electric and Manufacturing Company ; Atwood & McCaffrey ; Carbon Steel Company ; Harbison & Walker ; J. Painter & Sons Company ; Pittsburg Locomotive and Car Works ; Singer, Nimick & Company ; Spang, Chalfant & Company ; Wilson & Snyder Manufacturing Company ; Monongahela Navigation Company ; Pittsburg, Allegheny and Manchester Railway Company, G. F. Greenwood, Superintendent.

Respectfully submitted,

GEO. S. DAVISON, *Chairman.*

It was moved and seconded that a vote of thanks be tendered to all those who had contributed to the fund, the names of which were reported by Mr. Davison, chairman. Carried.

It was moved and seconded that the Society tender to the Reception Committee a vote of thanks for the able manner in which it had discharged its duties. Carried.

Mr. A. Dempster moved that the committee be instructed to ascertain if there is a delegation of German Engineers now in our city, and extend to them such courtesies as the balance of the funds will permit, at the discretion of the committee.

Mr. Kaufman suggested an amendment to the motion, to the effect that the word "joint" be inserted before the word "committee," in order that the Reception Committee might work in conjunction with the Committee of the Chamber of Commerce.

After a long discussion as to the advisability of looking after the German Engineers, on Mr. Dempster's motion, it was found necessary to call for a rising vote, and the motion, as made, was carried by a majority of one.

Mr. G. Kaufman read a paper on

NATURAL FILTRATION FOR DOMESTIC WATER-SUPPLY.

It is now clearly proven to the satisfaction of all persons who have studied the subject, that many disease epidemics are caused by impure water-supply. This fact, disseminated throughout the country has awakened wonderful interest and has caused inquiries to be made into the methods known and used to purify water-supplies. Hitherto in constructing water works in America, but little attention has been paid to the quality of water supplied, the quantity having been apparently the only object in view.

In many places 250 gallons per capitum is furnished as against a maximum of 50 or 60 in Europe.

There are several reasons why American cities have not followed the examples of those European cities whose water-supplies have been for many years purified with excellent results. One is the too burdensome cost of purifying the large quantities required. Another is the lack of knowledge that epidemics were caused by impure drinking water and that known purifying processes were efficient. It was the universal belief that impure river water quickly, naturally and effectually purifies itself. This belief was held by eminent hydraulic engineers who did not hesitate to construct large works taking their supply from rivers into

which growing cities and towns situated above were emptying their sewage. This practice was of course followed under a conscientious supposition that it was safe beyond any doubt and fully warranted by the experience of hundreds of cities and towns throughout the country. Recent developments on this subject will convince any student that supplying, directly to a community, water, which has been taken from a stream into which sewage is being emptied, is anything but safe practice.

The question of the self-purification of river waters was thoroughly investigated by Dr. P. F. Frankland, of London, England. In 1891, before the International Congress of Hygiene, he read a paper giving the results of his investigations. They were as follows:

"Sedimentation is the main cause of any self-purification of rivers.

"Of any rapid oxidation of dissolved organic matter there is still no reliable evidence, although, of course, dilution will produce a superficial appearance of such a result.

"The removal of microbes by sedimentation is a process which cannot be relied upon as furnishing any guarantee that harmful microbes turned into a stream at a given point, will no longer be present in the water lower down.

"Many forms of pathogenic microbes remain alive for a long time and after sedimentation may be carried down stream by a flood in state of vitality.

"All water supplied should therefore be subjected to the most careful subsidence and filtration through sand."

The present state of our knowledge regarding water is due largely to the discoveries made by the microscope and it is now clearly understood that in addition to a chemical analysis of a water-supply, it is absolutely necessary to make also a microscopical investigation to obtain a true knowledge of its condition.

The methods for purifying water-supplies are classed into three heads, viz.:

By Natural Filtration.

By Sand Filtration.

By Mechanical Filtration.

Sedimentation in reservoirs will also improve water and besides there are several electrical methods being experimented with. The three classes mentioned are the best known. Those water works, which obtain their supplies from underground sources, are said to obtain water purified by natural filtration. The method of sand filtration consists of passing surface-water through artificially prepared beds of sand and gravel.

Those systems which purify water by mechanical filtration, embrace such methods as the Anderson Revolving Purifiers, the filters manufactured by the New York Filter Company and many others.

The relative merits of the various methods for any particular locality can only be determined after careful investigation and proper estimates of cost.

As the time is near at hand when it will be necessary to adopt some method for the purification of the water furnished the cities of Pittsburg and Allegheny, this paper is submitted for the purpose of eliciting a discussion in the Society, and if possible to awaken an interest on the subject in the minds of the public at large. On account of the extent of the subject, this paper is confined solely to natural filtration, the writer leaving the other methods to be treated of by other members of the Society.

Where there is an underlying impervious stratum, water accumulates above it to form what is called the "ground-water" of the locality.* This water has been filtered by natural processes and is declared by competent authorities to be absolutely free of disease-germs. The distance of the ground-water from the surface is dependent upon the rainfall. It is claimed by eminent authorities in Europe that its height and fluctuations are important factors in the sanitary conditions of any locality. Its surface may be horizontal, but usually has an inclination to a river or pond, and has therefore a sluggish movement.

Most rivers of any size flow for a portion of their course through beds of sand and gravel, which have been deposited

---

* See *Cyclopædia of the Practice of Medicine*, vol. xviii., "Remarks on Drinking Water and Public Water Supply," by Prof. William Ripley Nichols.

by the river itself. In such case, near the banks the ground-water stands at about the same level, and as we recede from the banks the water-level is found to rise more or less regularly according to the character of the deposit. The ground-water contributes in no inconsiderable amount to the volume of the river. It is important to notice that a river does not generally cut entirely through the water-bearing stratum, and often there is beneath its bed a deposit of water differing in character from that of the stream itself. It is well known that the beds of some modern rivers are many feet above their ancient beds, and the intervening deposits are filled with water moving slowly toward the mouth of the visible stream. It is often possible to obtain water by digging into the river bed when there is no longer surface water to draw upon.

The inclination of the ground-water depends on the character of the water-bearing stratum and the readiness with which it allows the water to pass through. The configuration of the impervious stratum below and that of the surface of the ground, exert but little influence on the inclination of the ground-water.

Deposits of ground-water are not universally prevalent. Their existence depends solely upon the character of the soil. If this is of an impervious nature, all rain precipitated thereon will, of course, run off on the surface. But wherever the soil permits the rain water to penetrate it, a large percentage of the rainfall is so taken up and is held by the impervious strata below. In many places there are, several hundred feet below the surface, extensive gravel-deposits, leading into which are underground courses gathering water from many miles. The city of Memphis now obtains its water from such a deposit. This is said to be of immense extent, underlying all of the gulf states east of the Mississippi river.

In a paper on "Underground Water-Supply" read before the International Engineering Congress of the Columbian Exposition, 1893, Mr. B. Salbach, of Dresden, Germany, gave the results of his experience during twenty-six years of practice devoted almost exclusively to underground water-supply engineering.

He describes a number of such works. The claim is made that the number of water-works constructed recently having under-

ground sources of supply has increased in greater proportion than those drawing from rivers and filtering the water thus drawn; and the use of such sources is destined to attain a still greater increase, by reason of methods which have been discovered quite recently for changing to a good quality of water, which when first drawn, does not seem fit for use.

Water of this kind, when drawn from a considerable depth, even when requiring such treatment, offers the best of assurances that it does not contain the germs of destructive epidemics. In this respect those works which have proper underground sources of supply are far superior to those which use surface-water, and depend upon some artificial method of purification. The slightest lack of vigilance on part of those in charge of such works is liable to permit contaminated water to be delivered to the consumers. As a rule, all purifying plants using artificial methods will only give good results when in the hands of careful specialists.

As the writer has for some time believed that an underground source of water-supply is available to the cities of Pittsburg and Allegheny, he has gathered considerable information and presents herein such as he deems applicable to the Allegheny river.

Unless disturbed, ground-water is bright, clear, and free from organic matter. It has been subjected to a long process of sedimentation and intermittent filtration. The excellent results obtained at Lawrence, Mass., during the experiments with intermittent filtration, clearly show why ground-water should be free from pathogenic bacteria.

In passing through the earth the ground-water takes into solution such mineral matter with which it may come in contact, thus causing the obstacle which has prevented its greater use. There is great danger in the use of underground water when the wells and galleries cannot be kept free from the effects of sewage sinking into the ground. Sites, that are free from such danger, must be selected for the wells or galleries from which the supply is to be obtained.

At Halle, Germany, 3,750,000 gallons of water daily are obtained from wells sunk into a thick and widely extended bed of gravel quite close to the junction of two rivers. The water so

obtained is not that of the adjoining rivers. This is proven by analysis. The wells have been in use twenty-six years, and whenever the pumps are stopped the water in the wells very quickly regains its level. In one well put down in 1868, water containing considerable iron was obtained, and consequently abandoned. A process by which this water is purified has been adopted, and the water is now used. It consists in passing the water through gravel and a sand filter, thus exposing it to the action of the air. The result is a quick oxidation, an escape of sulphuretted hydrogen and a yield of perfectly clear and beautiful water. Mr. Salbach mentions other places at which water containing iron is thus purified.

The city of Leipzig obtains an abundant supply of water from a subterranean stream in an old river channel.

The city of Bernberg obtains its supply from a well sunk into a gravel bed 30 to 40 feet thick. The area of the plain surrounding this well is 200 square miles. The yield is 1,500,000 gallons in twenty-four hours, which is, however, smaller than its capacity.

Numerous other places in Germany obtain their supply from wells sunk to underground deposits of gravel. In general, those located in valleys of large rivers are the most reliable. Quantities up to 7,500,000 gallons per day are obtained. The city of Buda-Pesth on the Danube has determined to construct new works, depending on this source of supply, and expects to obtain 50,000,000 gallons daily. Mr. Salbach describes in detail his experience with the Dresden water-works. For this city a supply of 27,500,000 gallons in twenty-four hours is obtained from wells. In concluding his paper, he mentions that he has been called upon by the city of Vienna to prepare plans for a ground-water supply of a capacity of 100,000,000 gallons per day.

In England a large number of towns obtain their supply from wells sunk into the chalk measures, which contain large deposits of water. This water, when first drawn, is, of course, hard, but, when softened, becomes of excellent quality. All the softening processes used are modifications of that patented by Dr. Thomas Clark, of Aberdeen, in 1841, and that is by the addition of lime

water and then filtering the precipitate. An historical review, and an account of the various processes now used, was written some years ago by Mr. Baldwin Latham, and may be found in the *Engineering News* of January 31 and February 7, 1885.

At the water-works of the city of Southampton, about 2,500,000 gallons are daily softened. This is the largest amount treated by any softening plant in England. In Vol. 108, *Proc. of Inst. of Civil Engineers*, the engineer, Mr. William Matthews, gives a detailed description of these works.

The supply is obtained from two bored wells, each 6 feet in diameter and 100 feet deep. Their capacity is 3,000,000 gallons per day. The total cost of the works was $315,700, the softening plant and kilns costing $51,700. The cost per annum for a daily supply of 1,000,000 gallons is $1518.40. The total hardness of the water is reduced from 17.99° to 6.02°.

In America the use of driven wells to obtain the ground-water supply is well known, but has only been used, except in few instances, where there is an absence of surface supply.

Another method to collect an underground supply of water is by means of infiltration galleries placed in gravel deposits along streams. In such cases it is not always clear that the water so obtained is entirely the ground-water. A portion or all may be the river-water which has percolated through the gravel. When the galleries are placed along the bank, parallel to the stream, it is sometimes found that the water has an entirely different character. It is therefore to be presumed, when such is the case, that the ground-water deposit has been tapped.

The term of "natural filtration" has been more generally applied to this method than to that using deep wells. This method embraces those which use shallow wells sunk in the bed of streams or reservoirs constructed immediately adjacent thereto.

The use of this system has been more or less satisfactory, depending largely upon the conditions surrounding each case. A statement of the general result would be that the quality of the water is almost always good, but the quantity is not always satisfactory. Frequently, when first used, the galleries furnish an excellent supply of water, but, after a time, by the silting up of the

gravel between the river bed and gallery, the quantity becomes insufficient. This condition is usually caused by the galleries being too small, the suction of the pumps thereby causing an unnatural and very rapid movement of the water through the gravel towards the gallery. The galleries should be of such size that the movement of the water through the gravel should not be materially accelerated by any action of the pumps. That there have been failures in attempting to use this method is not an argument against its use in such specific places where the surrounding circumstances are such as would indicate that it could be used to good advantage.

That the Allegheny river is adapted to the use of such a method, the writer has no doubt. Its swift current, carrying most of its silt into the Ohio river; its immense water-shed; its coarse gravelly bed, 40 to 60 feet in depth, argue well that the cities of Pittsburg and Allegheny may, underneath its bed, find a large supply of water which is not only clear but also undoubtedly free from all disease-germs.

Many examples of natural filtration could be given, but a few only whose characteristics are of interest to this locality will be mentioned.

Mr. James P. Kirkwood, in his report to the city of St. Louis, describes a number of foreign plants which he visited in 1865. His report on this subject, as well as on sand filtration, is considered authoritative, and will repay any one interested to read it. The works described by him are those of Genoa, Toulouse, Lyons, Angers, and Pesth. Covered galleries are used, which pass through beds of gravel, at depths sufficiently below the channel of the neighboring stream to insure a supply of water within the gallery during the lowest stage of its water. The water in the galleries rises and falls with the height of the water in the river. The widths of the galleries vary from 8 to 30 feet. The character of the stream, and the fineness or coarseness of the gravel in which the galleries are placed, influence largely the rate of supply. The bottoms of the galleries are not paved, and the infiltration is usually through them. The minimum deliveries, in U. S. gallons per square foot of bottom area, per day, are as follows:

	U. S. galls.
Toulouse,	288
Lyons,	147
Angers,	300
Pesth,	182

Mr. Kirkwood mentions a rate of 200 gallons per square foot for a plant for St. Louis, in the sand beds of the Missouri. At this rate, with galleries 20 feet wide, the length required to give 1,000,000 gallons daily would be 250 feet.

The works mentioned by Mr. Kirkwood have been in operation many years. At Lyons, a supply of 600,000 gallons daily is obtained.

The city of Genoa obtains some of its supply from the river Scrivia, at a point 16 miles away. At this point, the bed of the river is composed of gravel, 40 to 50 feet in depth. This is underlaid by rock, and the underground flow of filtered water is held up by this rock. The underground flow is doubtless moving down the valley, which has considerable fall. The infiltration gallery is built clean across the river. It is 5 feet wide, 7 to 8 feet in height, and 1780 feet in length. The side walls are carried down to the rock, thus intercepting all the underground flow. The gallery is constructed of masonry, and the water enters it by pipes built in the up-stream side. The water obtained is clear and limpid. At the time of Mr. Kirkwood's visit, 2,536,000 U. S. gallons were daily supplied. To test its minimum capacity an experiment was made during a very low stage, and a delivery equal to 11,413,000 U. S. gallons in 24 hours was obtained.

In the Ninth Annual Report of the Massachusetts State Board of Health, an account is given of a small gallery on the Westfield River, and is there said to give an excellent supply. Its capacity is at the rate of 600 gallons per square foot per day.

At Eureka, Cal., there is a filter gallery designed by Mr. H. L. Ricks, noteworthy from the fact that it is supplied with an automatic flushing arrangement, by which a large amount of water can be introduced into the gallery in the reverse direction and under pressure, thus washing the gallery, and preventing the silting of the filtering medium. The filtering area is only 240 square

feet, the rate of infiltration being 1148 gallons per square foot per day. This is entirely too high, and consequently the gallery does not give perfectly clear water when the river is muddy, but it takes out most of the sediment. For back-flushing, water is let into the gallery from a tank. Here, 16,000 gallons are required, amounting to about 12½ gallons for every cubic foot of the filter gallery.

Mr. Lefort, Engineer in Chief for the Department of the Lower Loire, made experiments, extending over a period of 14 months, on a system of natural filtration devised by himself, the results of which are valuable to us on account of the chemical and bacteriological investigations. His method consisted of dredging, in the stream, a large circular area to a firm foundation. On the outer edge of this he placed a circle of rocks to the height of low water. In the centre of the dredged area he constructed a masonry "well-tower," in the walls of which were left openings up to within 3 feet of low-water mark. These are cone-shaped, fitted at the inner end with a valve, and at the outer end with a metallic screw, and are filled with gravelstones of varying dimensions, decreasing towards the inner end. Then, between the central tower and the ring of rock, would be deposited fine river-sand uniform and well washed. The sand cone had, in the experimental well, a diameter of 50 feet at the bottom, and a height of 33 feet. The pump was placed in the well-tower. For 65 days all the water pumped, 26½ million gallons, was emptied into the river. It was then operated for 14 months. During the whole year the water was absolutely limpid, transparent, of an agreeable taste, and with no odor. From the chemical tests it was found that the water of the river and that of the well were identical in mineral matter, the conclusion being, that all the water came from the stream above. The bacteriological result was as follows:

	Lefort well.	Loire water.
High water, winter, . . .	73 per c.c.	9430 per c.c.
Low water, summer, . . .	132 per c.c.	24,000 per c.c.

The cost of the experimental well, which had a capacity of 660,000 gallons per 24 hours, was $125,000.

Twelve wells, to supply 120,000 inhabitants, 45 gallons per head per day, would cost $150,000. This is the cost in France.

In the central tower was placed an aspirator, by which air could be forced through the filtering medium.

Mr. Lefort claims that the following desirable results were obtained:

1. Stopping off from the filtering reservoir all neighboring subterranean streams.
2. Stopping off the lower strata of the river water.
3. The oxidation of the working surface of the filter.
4. The absolute homogeneity of the mass of filtering sand.
5. The certain and constant regulation of the air-pressure.
6. A lateral pressure, to affect the filtering sources and to reduce the clogging.

The question now to be considered is: Can we obtain an underground supply from the bed of the Allegheny river? It seems to the writer that there is no doubt of it. Hemmed in a narrow valley, its gravel bed must be the course of a large proportion of the ground-water produced on its drainage area. It is reasonable to suppose that, at many points of its course, some of the underground streams flow into the river, and, rising up from underneath the bed, help to maintain its visible flow. But, that large quantities do constantly move through its bed in the vicinity of Pittsburg, is evidenced by the large yield of wells that have been sunk along its shores. In view of this and the experience of others similarly situated, the writer feels justified in the belief that in the gravel bed of the Allegheny a sufficient quantity may be obtained to supply the two cities.

Nothing of a positive nature can be said in regard to the quality of the water that may be thus obtained, owing to the fact that a comprehensive examination has not been made. Wells, 20 to 30 feet in depth, sunk along the shores at various places, and also on Brunot's Island, have yielded hard water, unfit for domestic and boiler purposes. These wells have probably tapped the first layer of ground-water. The deeper wells on shore, such as those in the Allegheny parks, supply soft water, and it may be that in

the centre of the stream the underground flow may be soft and fit to be distributed. This can readily be determined by boring test holes. If it should be found that the water is hard, the site need not necessarily be rejected, because the water may be softened before distribution. From the English experience, the cost of doing this is 0.416 of a cent for a thousand gallons, or $1518 per year for a daily supply of a million gallons. This is the cost in England. The labor item is about 30 per cent. of the total cost. $2000 per year will fully represent the cost in America for each one million gallons daily treated.

If it should be found that the impurity is caused by iron, the German method, recorded by Salbach, could be applied at a cost surely not exceeding the one above mentioned.

To insure a supply of ground-water, free from any sewage, the infiltration system must be located above the city limits.

For galleries, depending largely upon a supply from the river, the writer would suggest a series of flumes at least 15 feet wide and 4 feet high, made of wood, and sunk into trenches dredged transversely in the bed of the stream. The flumes should be placed as far apart as possible, and should lead into a collecting gallery placed along the shore parallel to the stream. As a precaution against silting, a stand-pipe should be constructed whose contents could be emptied at will into any one of the infiltration galleries.

The writer's preference would be that these should be placed in one of the numerous riffles of the Allegheny, at a depth of about 10 feet below low water, in order to reduce the probability of tapping the ground-water as much as possible. If this be successful, there would be no necessity for treating the water so obtained.

With the coarse gravel found in the bed of the Allegheny, a rate of infiltration of 300 gallons per square foot per day can, in the writer's opinion, be safely assumed—so that, for a supply of 30,000,000 gallons per day, 100,000 square feet of area would be required. This can be obtained with 7 galleries, 15 feet wide and 900 feet long.

Discussion.

The Chairman: You have all heard the paper read, is there any discussion?

Mr. A. Dempster: This paper calls to my mind the assertion of an Englishman made a good many years ago; he said there was an underground river (Mr. Kaufman calls it ground-water) and he wanted money to construct a wall across the valley between the hills, and so build a dam to catch that under current and utilize it; that was before the Pittsburg water-supply was provided.

Mr. Kaufman: The idea then is pretty old.

Mr. J. H. Harlow: In regard to Mr. Kaufman's proposed filtering galleries, I designed and constructed a similar one in 1888, at Etna; it was a crib very much like that described by Mr. Kaufman, made of 10-inch by 10-inch hemlock sunk in an excavation dredged in the river-bed just below the Sharpsburg bridge; the excavation was about 16 feet deep, after the crib was sunk in position and covered over with gravel, the top of the filtering material was about on a level with the original bottom of the river. The only intention of this crib was to clarify the water and also to get rid of substances floating down the river and dirt during high water; I am inclined to think that is all that has been done by it. My impression is that we did not strike much underground water; I think the water came mainly from the top surface of the crib and from the river, as this is the direction of least resistance. The filtering crib is 4 feet high, 16 feet wide, and about 100 feet long; there has been a million and a half gallons per day taken out, apparently without any trouble in getting water; it has been in use since January, 1889. About a month ago I had Dr. E. G. Matson go up and take some samples to make bacteriological tests. I went with him. One sample was taken from the river over the crib in the bed of the river, and another taken from the pump in the pump-room.

I was surprised to find any difference in the color of the water, because it was in the low season and the water in the river was clear, but there seemed to be a little difference in the color; I called Dr. Matson's attention to the matter and he agreed with me

that the water obtained from the pump was clearer than the river water. He examined the sample afterwards; the river-water contained about 613 bacteria per c.c. and the filtered water about 6 per cent. less, or 576 per c.c., so that as a microbe strainer it was not very successful. So far as the people of Etna were concerned, however, they seemed to be satisfied. Water was passing through the filter at the rate of one cubic foot per square foot per hour.

MR. KAUFMAN: How far from the shore was the Etna crib placed?

MR. HARLOW: Just below the first pier from the Etna side; I suppose 150 to 175 feet. I do not know exactly.

MR. KAUFMAN: Has Etna any sewage system?

MR. HARLOW: The Etna sewer comes down into Pine run and enters the river below the filter crib.

MR. KAUFMAN: Perhaps the ground-water there might have been contaminated by the sewage, such a condition might account for the slight difference in number of bacteria, and then again, unless there is some means of supplying air to the filtering material there will be no reduction in bacteria; I think this has been proven by the experiments at Lawrence, Mass.

MR. T. P. ROBERTS: I cannot understand how we could have a running stream of water in the gravel beneath a flowing stream above a river-bed. I can understand very well how standing water can filter through sand, gravel, etc., no matter how deep you go; the river-water will go through the sand and gravel. If we imagine a flowing stream underneath another flowing stream, we must still further imagine that the strata of sand and gravel through which the lowermost stream flows is of uniform thickness and uniform porosity; for if at any point it was, even in part, impeded in its course, the surplus would have to rise through the gravel and join the upper current.

A solid ledge of rock crosses the Ohio river, at Le Tarts Falls, 237 miles below Pittsburg; there is also a solid rock ledge at Louisville and other places, and there are also a number of solid rock ledges across the Monongahela river above Morgantown. Now if there were an underground stream flowing under the

bottom of the river through the sand and gravel, when it encounters these ledges of rocks it would rise to the top, causing a corresponding increase of water at that point, but I have never noticed nor heard of any increase at these points due to that cause.

I do know of numerous springs rising up through the gravel-beds of our rivers, but according to Mr. Kaufman's theory they should unite in volume with the lower stream and not come to the surface. In the Allegheny river especially, large bodies of ice are from time to time coming down causing much disturbance of the bed of the river; islands are being obliterated in one place by ice gorges and new ones formed in others. A gallery 10 feet beneath the surface, of the bottom of the river, might have its covering of gravel removed by the ice, leaving the top of the masonry work exposed. I think it is very necessary to have a water-supply for the great cities in which we could have some means of regulating the filtering material; I do not see how we can do this by tunnels laid under the course of any stream. It seems to me that this is very essential in any filtering to have control of the filtering material.

Mr. G. S. Davison: I do not understand from Mr. Kaufman's paper that he argued that there is a large undercurrent under the bed of rivers. I take it that he meant that there is water underneath the beds of streams and to the depth that the soil is pervious to water. He did mean, however, that there were currents of ground-water from the sides of the valleys underneath the soil, and that the water thus found its way to the main stream and as quickly as its various resistances would permit. There may not be any perceptible current of water under a river bed, but if this ground-water is intercepted as it arrives at the bed of the stream, and in any manner removed, it will be at once replaced by ground-water or the water from the main stream, depending upon which is under the greater pressure at the point of removal. Mr. Kaufman's idea is that this ground-water slowly finds its way beneath the bed of the stream and occupies the soil, while the stream-water very largely remains above the bed. In going below the bed of the stream with his galleries he would

expect to obtain principally ground-water that has been filtered through great distances in the soil and at an exceedingly slow rate. At times he may get a large proportion of the stream-water should the supply of ground-water be small, in which case it too would be filtered on its way to the galleries. In all this he is undoubtedly correct. I do not understand that simply because there are walls or ledges of rock across the bed of a stream, that there is no water in or beneath the rock. It may be of such a character that there is water in it. If it is seamy, it would hold water just the same as gravel or any soil, but not to so great an extent. Beneath the layer of rock which is visible to the eye in a river bed there may be soil into which the water could find its way just as well as though the soil were above the rock. These are things we cannot see and can only speculate upon. If I have not taken Mr. Kaufman's paper correctly, I would like to have him explain it further.

Mr. Kaufman: I anticipated that I would receive considerable adverse criticism on this paper, because it is not supported by careful local experiments and facts deduced from such experiments. However, as mentioned in the paper, instances of the use of this method at places similarly located to our cities, have been quoted for the purpose of calling the attention of the local authorities to it.

Mr. Davison has correctly grasped the meaning and intention of the paper, with the exception that from galleries placed in a riffle, but ten feet below the bed, more river-water can be expected than ground-water, and there would be but a small reduction in bacteria.

In regard to the objections raised by Mr. Roberts to the underground streams, it strikes me that the mere fact of wells running dry in periods of drought is sufficient proof for the statement.

That ice-gorges do alter the bed of the Allegheny river is of course true. Their occurrence at any one point is, however, exceedingly rare. Nevertheless, this condition suggested the propriety of constructing the galleries in the cheap way as described, so that if destroyed by an ice-gorge, they can be cheaply and quickly replaced.

Mr. C. Davis: I think the scheme of underground filtration

is impracticable for obtaining a large supply for these cities. In the first place, you would not get unaltered river-water; you would get invariably hard water if you go below the surface of the bed to a depth of ten feet; this has been brought up here before. Prof. Langley has already cited cases before this society in vol. v., p. 107, that were not a success and had to be abandoned —notably the one at the Crescent Steel Works. The well at the Lucy Furnace was unsuccessful and had to be abandoned.

Mr. Emil Swensson: The one at Lucy Furnace is in use, and produces 3,000,000 gallons of water per day, but the water is hard.

Mr. Davis: The Pittsburg, Allegheny and Manchester Railway Co. have tried collecting water in this way, but without success. I have noticed wells on Neville Island, and have found water there to be exceedingly hard and to contain iron and other mineral substances. Then I know of other wells—two down the Ohio river, near this city, one at Avalon and the other at Sewickley, and two up the Allegheny river, one at Aspinwall and the other at Freeport—which had to be abandoned. There is another point: you could not keep these filtering galleries under control, so it would not do to depend on them for a large snpply; and the yield would not be reliable and would be diminishing all the time. Now there are several cities that have tried this; Lowell, Providence and Newark tried it, and it was not a success. The plants in Lowell and Providence were on a larger scale than anywhere else. There is nothing in this method for a large supply.

Mr. L. A. Meyran: Referring to what Mr. Kaufman stated regarding German cities, a great many of them have two water-supplies, one for culinary and drinking purposes, drawn from clear streams, springs, or perhaps from underground sources, and the other—which is taken from the rivers—for washing, street purposes, etc. Of course, having two sources of supply for Pittsburg would hardly be practicable, but in Europe there is very little water wasted, and *no* water that is used for drinking and culinary purposes, and only a small amount is necessary; whereas, the water used for washing and other purposes is drawn from the rivers, where it can be had in any quantity.

MR. C. DAVIS: Mr. Kaufman referred to the water in the Allegheny parks; the water in the Allegheny parks is not reliable. in one instance the well was highly charged with mineral substances, and it was found necessary to close it and drive another tube in to take the water from another stratum. Fair water was finally obtained. The water in the park wells is not satisfactory.

MR. KAUFMAN: In answer to Mr. Davis I will say that in my paper I made the remark that shallow wells along a stream are liable to be hard, and I contend that it, at least, is worth the experiment to find out whether or not there is a sufficient quantity there to supply the two cities, and if it is hard it can be softened at little expense. I would like to ask Mr. Davis if they endeavored to soften the water at various places he mentions.

MR. DAVIS: No, I do not know of any case where they tried to soften it, but I think the gravel in this valley here is charged with minerals; has something in it that alters the water and renders it unsatisfactory.

MR. KAUFMAN: With treatment or without treatment?

MR. DAVIS: Without treatment, Allegheny river water is good when taken above the sewage influence of the city and suburbs.

MR. KAUFMAN: I merely suggested this as one method that might be satisfactory. I do not claim superiority of this method over other methods.

MR. DEMPSTER: In your paper you work very largely on suppositions; engineers should go above suppositions and try to get down to facts.

Mr. DAVISON: I think that is the object of Mr. Kaufman's paper; he suggests something that will give good water. He handles the subject in such a way that he simply suggests an experiment he tried, which, I think, is about as far as he can go. During a long spell last year, and also in this year, I noticed, in travelling back and forth along the left bank of the Ohio river from Pittsburg to the mouth of the Beaver river, that all the streams that entered the Ohio on that side had no water visible in them except one, and that was Chartiers creek. It has a drainage of about 250 square miles. There are some of these streams, other than Chartiers creek, that have water-sheds of about 40 or 50

square miles. If all the tributaries of the Allegheny river of the sizes of streams I mentioned were at times perfectly dry as these others seemed to be, and that the Allegheny river is dependent upon streams of large drainage area for its water during prolonged droughts, I cannot understand where the water in it comes from, unless a large portion of it is coming from underground sources, flowing there by the pressure of the water on the hillsides under the ground. At the times I noticed these streams were dry. I think I am safe in saying that all the water that was flowing in the bed of Chartiers creek could pass through a 12- or 15-inch pipe at, say, 3 feet per second.

Mr. Emil Swensson: It is very evident that the water once obtained at the Crescent Steel Works is the same water they are getting at the Lucy Furnaces; the water is very clear, but is exceedingly hard, and cannot be used in the boilers.

Mr. Wilkins: In the discussion of this subject there seems to be only two questions that need satisfactory answers: First. Is the water from the underground flow free from bacteria? Second. Can there be a sufficient quantity obtained? The first can be answered after a bacteriological examination has been made. With regard to the second, Mr. Swensson states that the Lucy Furnace well gives a daily yield of 3,000,000 gallons. This looks as if, by Mr. Kaufman's plan, the amount required by Allegheny City —30,000,000 gallons—might be obtained. As to Mr. Davis's suggestion—that the water might be hard—Mr. Kaufman has shown in his paper that hard water is softened in England at a very small cost, and what can be done there can probably be done here. The first two points are the important ones, softening is a minor one; and if the first two questions can be answered in the affirmative, I should not hesitate to endorse Mr. Kaufman's plan.

Mr. Dempster: If you have proved that at the Lucy Furnace there is a well which produces so much water, it remains to be proved whether or not other wells will produce a like amount, and multiply that by the number of wells; there is your quantity. The only way is to find out by actual test whether or not the water is in there in sufficient quantity to guarantee sufficient supply for the needs of the cities.

Mr. KAUFMAN: I think Mr. Wilkins has covered my statements. In reply to Mr. Dempster's question, I can mention one local fact. Yet I must contend that the facts relating to other places, as given in the paper, are sufficient for its announced purpose. When the Ninth Street bridge was being built, a pier was built on the Allegheny side; to accomplish this we had occasion to excavate a few feet below low water, and although the river maintained a stage of about 15 or 16 feet, we found that the water pumped out of this excavation was always clear. I did not measure the quantity of water pumped out. The size of the excavation was 18 feet by 60 feet. We had one 8-inch and one 10-inch centrifugal pump, besides two steamboat syphons, and they could not reduce the height of the water.

Mr. Arras, local U. S. Assistant Engineer, will soon pump out the coffer-dam for the lock at Herr's Island, and he has promised to let me know when he does it. I will then take occasion to measure the flow and find out what it is per square foot.

MR. JAMES SCOTT [Communicated]: The supply-well at the Lucy Furnace delivers water so high in lime and in other scale-forming properties that we do not use it for boiler purposes—only for cooling. We have never made an analyses of this water.

MR. WM. METCALF, Crescent Steel Co. [Communicated]: Some years ago we were annoyed so much by sand, sticks, leaves, oil-works residuum, etc., etc., in our pumps and boilers every time the river rose, that we hired a dredge boat, dug a hole in the deepest part of the river, about 15 feet deeper than the natural bed, sunk a timber-crib into this hole, put our suction pipes into the crib, and covered the whole with loose stone, restoring the general level of the river bed. The covering soon silted up, and we were pumping beautifully clear water from our crib. The water was so clear that it was blue, and the bottoms of our tanks could be seen through 16 feet of water almost as clearly as if there were no water there. We were pumping over 1,000,000 gallons a day, and we thought we were happy. In a few weeks our boiler cleaners reported a great increase of scale in our boilers, more than the mud of flood times even; the utter destruction of their clothing, and great injury to their skin. Upon examina-

tion I found that there was a great increase of deposit in the boilers, and that the men's arms were sore and inflamed.

Prof. Langley examined the matter, with the following result:

700 c. c. clear crib water leave .135 grm. residue.

700 c. c. hydrant water leave .0225 grm. residue.

700 c. c. river water, near crib, leave .01 grm. residue.

The residue in the crib water was chiefly carbonate of lime. We abandoned the crib, destroyed it, and now take our water from city service.

THE CHAIRMAN: Gentlemen, there is another paper to be read here this evening, a paper written by our former Secretary, Mr. S. M. Wickersham, entitled "Extinguishing Oil Fires." Mr. Roberts will read the paper, as Mr. Wickersham is unable to be with us.

TO EXTINGUISH OIL-FIRES.

BY S. M. WICKERSHAM.

THE ravages by fire have at all times been great, and the cause of immense loss of property, being only equalled in destructiveness by water, which has to this day been relied on, almost exclusively, to stop the fearful work of fire. In many cases, when water is properly applied, it performs the desired object, while in others it fails, and in some cases seems only to add fuel to the flames. Especially has this occurred since the natural oil and gas production have become such important additions to our industries. Immense losses have been caused by the burning of oil which has been stored in tanks at the wells, where it accumulates until removed by the pipe lines; and many times at the refineries, and also after being refined and carried to the shipping point and stored in large tanks, awaiting shipment—but almost always with the same result: total destruction. To arrest the spread of the flames to other property is all that has been done, and to that end every effort is directed. To extinguish the fire in the burning oil seems impossible; it must *burn out.*

It is a proper subject for our inquiry to examine and ascertain why water fails there to do its expected work. In every instance fire

communicates to the fluid on the surface, and as it burns it is kept supplied from the stock below, which is probably no more affected by the burning surface than the oil in a lamp is affected by a burning wick. The streams of water thrown on the tank into the flames, are resolved by the heat into its elements, and may serve to increase instead of diminish the flames unless it falls in such heavy masses as to smother the burning oil—which may be done in a small fire with our fire apparatus; but not in case of the burning of a large tank. Some years since, I was operating a small rolling-mill and wire manufactory. In the tinning department the kettle (for melting the tin) was set in a brick furnace under a long shed, open toward a roadway. A large flume covered the kettle, and extended up through the roof of the shed, to carry off the flames. The flume and shed were all built of wood; when operating, the tin in the kettle was kept covered with grease, to prevent the molten tin from oxidizing.

On one day we had been doing some work at the furnace; across the road was a pile of sand, left by the masons, with a shovel standing in it. The furnace was in heat, but it had become overheated, and suddenly the grease in the kettle burst into flames, which communicated to the wooden flume. The alarm of fire was given, and there was every prospect of a disastrous fire, as the shed connected with the main buildings of the mill. I was standing at the time about 100 feet from the furnace, and started towards it. When I saw the sand pile with the shovel standing in it, to seize the shovel and throw some sand on the kettle was the work of a moment. Simultaneously the flames were extinguished, a dense black smoke swept up the inside of the flume, which was slightly charred, and no other damage done, but a disastrous fire prevented. My object in writing this paper is to induce some of our inventive members to devise a good, practical method of applying sand or clay in extinguishing fires, particularly in cases of oil fires. In tanks where oil is stored there is a constant emission of a highly inflammable gas, which is readily ignited by lightning, and usually burns until the contents of the tank are destroyed, unless a way has been provided for drawing it off from the lower part of the tank, when a good portion of it

may be saved; but often the heat affects other tanks in the vicinity, thus adding to the conflagration, and often immense loss occurs.

If at the beginning of the fire dry clay or sand were thrown on the blazing oil, it would chill and check the burning surface at once. To provide a quantity of clay or sand and have it in a reservoir convenient to the oil tanks, would be a matter of little cost, and, if protected from rain, would always be in a condition for use. How to use it? how to best apply it? is the problem to be solved. I think the subject is worthy of our attention. A feeder can be so made as to use the stream of water from the hose-pipes to carry the sand or clay to the point required. A blast of air can be made to do the same work, or mechanism can be so arranged as to throw the sand or clay on the burning oil.

To put a stop to the great losses so frequently occurring is a matter worthy of our best efforts, and I trust this may be brought about.

Discussion.

Mr. T. P. Roberts: I remember at the old exposition in Allegheny, some twelve or fifteen years ago, that there was some inventive genius there who had a device for extinguishing oil fires. He had an oil tank on the ground about 30 feet in diameter, and raised about a foot above the grass, and that filled with oil. They then ignited that, and the flame shot up with tremendous force. The roar of the fire was terrific. Around the tank was a circular pipe, with numerous jets, containing carbonic acid gas, and at a given signal the gas was turned on, and quicker than you could think the flame was extinguished. I have never seen any other experiment made with carbonic acid gas in extinguishing oil fires, although I understand that such experiments have been made here.

Mr. Dempster: Yes, Dr. Connelly, over in Temperanceville.

Adjourned.

James H. Harlow,
Secretary *pro tem.*

Meeting of Chemical Section.

October 24th, 1893.

Mr. Joseph H. Eastwick in the chair. Thirty members were present.

The minutes of the September meeting were read and approved. A communication from the Belgian Chemical Society, inviting the members of our Society to send delegates to the International Congress of Applied Chemists, to be held at Brussels, on August 4, 1894, was read. Papers on subjects relating to applied chemistry, particularly to fermentation industries, will be presented. Excursions to interesting factories in the vicinity and to the Universal Exposition at Antwerp will be made.

Dr. Charles B. Dudley delivered an address on "The Necessity for Standard Methods for the Analysis of Iron and Steel." A discussion followed.

Adjourned.

J. O. Handy,
Secretary C. S.

STANDARD METHODS FOR THE ANALYSIS OF IRON AND STEEL.

BY C. B. DUDLEY, PH.D.,

Chemist, Pennsylvania Railroad Company, Altoona, Pa.

Mr. President and Fellow-Chemists: I did not have time to prepare a set paper for you, but I promised our worthy secretary that I would do the best I could to entertain you a little while, possibly bringing up some points which you may want to discuss a little later in regard to standard methods for the analysis of iron and steel. I will say, by the way, that the subject came up this summer with some promise of action being taken in the near future at the World's Congress of Chemists. I was asked to prepare a paper, and I chose for my theme this very subject of the necessity for standard methods for the analysis of iron and steel. That paper will be published in the Journal of

the American Chemical Society, and, doubtless, you will all get hold of it in one way or another. What I shall say to you this evening is partly drawn from that paper, supplemented by some further points that have developed since the meeting of the World's Congress of Chemists.

You are all familiar with the fact that several years ago, largely through Professor J. W. Langley's influence, a committee of thirty-five chemists, consisting of seven chemists in each of five different nations—England, France, Germany, Sweden and America—was chosen; in this country by the organization known as the American Society of Civil Engineers, in England by the British Association for the Advancement of Science, in France and Germany I do not know by what association, and in Sweden, I think, by the Iron Association, to analyze the same samples of iron and steel. The samples were prepared in Pittsburg by Professor Langley, who was then connected with Miller, Metcalf & Parkin. Unworthily, perhaps, I was chosen one of the seven in this country, and I have, therefore, taken a great deal of interest in this question of the analysis of iron and steel from the international standpoint. This work has progressed wonderfully slow. At the preliminary meeting of the American committee, there were four of the seven members present, and we could not help laughing after we had finished our business, planned out the work, etc., over this one point: that any one of us in our daily work would have felt perfectly willing to make a carbon or phosphorus determination in steel, and to abide by the result, but when it came to working on the same sample with thirty-four other chemists we did not quite care to put our results on record until we had spent plenty of time in working them out. The work has, however, progressed somewhat. I shall not entrench on the report which was made at the World's Congress on this subject, but shall take some figures out of it for my text. The sample steels were drilled, and the drillings mixed very carefully. There were four grades, differing in carbon principally. The large amount of drillings was mixed thoroughly, and sifted from fine material, and an amount equal to quite a number of pounds was sent to each of the foreign countries; a similar amount being retained for American chemists,

the idea being that later on, after we had found out how much carbon, how much phosphorus, how much silicon, how much sulphur, etc., there was in each of these samples, if any chemist, in any country, wanted to know whether he was doing correct work or not, he would simply send to the government office get ten grams of one or more of these standard steels and make an analysis of them and if he found the same figures that the thirty-five chemists found, then he would be entitled to conclude that he was doing good work; that is to say, his results were fairly accurate. I should have said, perhaps, that the mean of the results obtained by the thirty-five chemists is supposed to be the content of each of the various constituents in the sample steels. In the United States we have devoted ourselves to the determination of the phosphorus and the carbon; that is about as far as we have got, and we do not yet feel sure of these. Some of the foreign committees have done considerable work, but there is no report yet from the French Committee. The German Committee have struggled thus far wholly over methods, and have not made any analyses of the standard samples. The Swedish, the English and the American Committees, have made some determinations.

Now without giving any names, or letting you know anything except what is essential for my purpose, I want you to look at the figures on the blackboard as follows:

	1	2	3	4
	Per cent.	Per cent.	Per cent.	Per cent.
a, . .	1.44	1.46	1.46	1.43
b, . .	0.83	0.88	0.83	0.815
c, . .	0.50	0.55	0.49	0.45
d, . .	0.14	0.18	0.19	0.17

These figures represent the results of carbon determinations made by four different chemists, on each one of the four different standard samples of steel, about which we have been talking. The chemists are represented by the figures 1, 2, 3 and 4, and the samples of steel by the letters a, b, c and d. The figures opposite any letter represent the results obtained by the chemist represented by the figure above on the same sample of steel. Let us now study

these figures a little. You will observe that on the "a" steel, No. 1 chemist gets 1.44 per cent. of carbon; No. 2 gets 1.46 per cent.; No. 3, gets 1.46 per cent., and No. 4 gets 1.43 per cent. Here is a discrepancy of 0.03 per cent. on a moderately high carbon steel, which may be regarded as not very bad. But look farther. On the "b" steel No. 1 gets 0.83 per cent.; No. 2, 0.88 per cent.; No. 3, 0.83 per cent., and No. 4, 0.81½ per cent. Here is a discrepancy of nearly 0.07 per cent. in an 0.80 to 0.90 carbon steel between the four different chemists. The "c" steel is still more remarkable. No. 1 gets 0.50 per cent.; No. 2, 0.55 per cent.; No. 3, 0.49 per cent., and No. 4, 0.45 per cent.; a difference of a tenth of one per cent. in a 0.50 carbon steel. On "d" steel, No. 1 gets 0.14 per cent.; No. 2, 0.18 per cent.; No. 3, 0.19 per cent., and No. 4, 0.17 per cent. Now I shall not tell you who made these analyses, but I will say that each one of those chemists has more or less, a world-wide reputation. They are all men who have published work; they are all men whose work as chemists, would be accepted anywhere; their names are a guarantee of honesty, integrity and ability; and yet there is a discrepancy in their work in the worst case of a tenth of a per cent. in a total carbon content in a sample of steel of 0.50 per cent.

In view of these results, the first question that naturally arises is what is the cause of such discrepancy. It would undoubtedly require no small amount of investigation to locate the cause or causes of discrepancy in these cases, and for the purpose which we have in mind, it would be useless to speculate on the matter. The real fact, and the point which is of greatest interest to us is, that in the work of excellent and reputable chemists there is so serious a discrepancy, that the results obtained by these chemists are of very little value. A little later we will discuss the possible and probable causes of discrepancy, and possible and probable remedies.

Let us allow then for a moment, that at present there is a serious discrepancy between the results obtained by different good chemists, working on the same sample, and that if things go on as they are now, there will continue to be serious discrepancy.

The question arises, How are we going to overcome the diffi-

culty? I have already stated to you that as I understand it, the International Committee on Standards for the Analysis of Iron and Steel, was appointed with the idea in mind that it would enable us to sucessfully cope with this difficulty. As already stated, the theory was this: If any chemist is in doubt about the accuracy of his work, let him send to the proper place and get a sample of steel whose content is known and make an analysis of it, and if he gets the same results that the standard sample shows then he is entitled to conclude that his work is correct. But is that true? Is it correct to say that if I find the same phosphorus, etc., that was found by the committee, in a certain sample of steel, my work on other samples of steel is correct? The committee do not agree among themselves yet, but let us assume that as the result of the work that may be done within the next three or four or five years on these steels, the thirty-five chemists get within reasonable limits of error with these samples. Even then, assuming that, are we entitled to say that if you or I make an analysis of one of these samples, and get the same results that the committee found our work on other samples of steel is correct? This is worth thinking about, because if that is a complete solution of the problem, if we are entitled to say so much, then it seems to me there is nothing further to be said or done. All we have to do is to spur this committee to go ahead and finish up their work, and so far as discrepancy in analyses of iron and steel is concerned, the question is put at rest. I am inclined to think, however, that we cannot quite conclude so much. Let us see why. Let us suppose a case. Suppose that the phosphorus in the standard sample all existed as phosphate of iron; it is obvious that if I use a method in my own daily work, which gives all the phosphorus that exists as phosphate in any sample, I would check all right against the standard sample. On the other hand, suppose that some of the phosphorus in another sample that I am working on exists as phosphide, instead of phosphate, and that my regular method does not give all the phosphorus that exists as phosphide, it is obvious that my checking against the standard would be no guarantee that my work in the second case was reliable and accurate. Again take sulphur. If the sulphur in the standard sam-

ple exists in such a form, that it is all obtained by the evolution method and I get the same results as the committee, it does not necessarily follow that my work is accurate on other samples of steel, if they have any of their sulphur in such a form that it is not obtained by the evolution method.

In other words, to put the matter in brief form, it seems to me that even though we have a sample in which we know the content of the various constituents, and we make an analysis of that sample and get the right results, we cannot conclude from that that our work on other samples of steel is necessarily correct, unless the phosphorus, or sulphur, or carbon, or whatever the substance may be, happened to exist in the other samples in exactly the same way it did in the standard sample. We are still dependent on method, even though we have a sample steel that we know the content of. There is another phase of the case, viz.: There is often, as every one knows, more or less compensation of errors in analyses. Suppose, therefore, I work on one of the standard samples by a method in which the compensation of errors is such that I get exactly the standard results. It happens so in that case. But if I take a sample containing three or four times as much of any constituent, as the standard sample, the compensation of errors would not necessarily be the same. My regular work is not, therefore, proven correct by the fact that I check against the standard sample.

I hope you will understand that I am not trying to belittle the work of the Committee on International Standards. In my judgment that committee was the first step in the process, and enough work has already been done by that committee in this country and abroad, to much more than justify its existence, and a good deal more work will be done, without any doubt.

Now in order to refresh your minds a little, let us see how far we have got. First, there is discrepancy in chemical work; that is unquestionable. Second, the work of the International Committee will not quite enable us to overcome the difficulty. What are we going to do further?

Before discussing this question allow me a few words on the causes of discrepancy in chemical work. It seems to me the

causes of discrepancy may all be grouped nicely under four heads. First, non-uniformity of sample. That is perfectly clear. And the remedy for discrepancy between two chemists where the sample is not uniform is simply to exchange samples. I know of no other method. Both may be absolutely accurate in their work; but if the two samples supposed to be the same steel, but not actually the same, differ, then there is a perfectly good reason why the results of the analysis should differ. So we will dismiss that part of the subject, namely, the discrepancy due to lack of uniformity in the sample. The second cause of discrepancy may be grouped around impurities in the chemicals, or defects in the apparatus. The third cause of discrepancy may be grouped around the chemist himself, and much could be said on this point showing where the chemist might get into difficulty even though everything else was all right. The fourth cause of discrepancy is the method.

The plan of dealing with the first cause of discrepancy has already been discussed, and nothing further need be said on this point.

As to discrepancies due to impurities in the chemicals and defects in the apparatus, and as to discrepancies due to the chemist himself, it seems to me we can likewise successfully cope with them. If I am right, it is here that the work of the International Committee comes in. If I am working on a sample, and do not get the same results as some one else, which of us is right? If the difficulty is in my chemicals, if the difficulty is in my apparatus, if the difficulty is in myself, let me get some standard steel, and then I will not get the same results that the standard steel shows, because the difficulty is in my chemicals, or apparatus or in me. In other words, for those difficulties which arise from the impurities in the chemicals, defects in the apparatus, or which are due to the chemist himself, the work of the Committee on International Standards is entirely applicable. It is not necessary for the chemists even to exchange chemicals, or get a new piece of apparatus, or work in the presence of each other. Often, as you know, when two chemists do not get the same results, they work in the presence of each other. This is the common practice, I am

informed in assaying. The two chemists go to the same muffle furnace and work, each making an assay by the side of the other, each watching the other, using the same chemicals, practically the same apparatus, and the same method, and each one watching the other's manipulation. This would catch up the errors if they lay in any one of these three things, namely, in the chemicals, the apparatus, or the chemist.

But, as I have already tried to show, where discrepancies in chemical work are due to chemical method they are not so easily overcome. Now, what shall we do to overcome discrepancies that are due to method? Let me give you an illustration on this point.

In our regular work at Altoona, we have made a great many determinations of phosphorus in steel, and it has happened not a few times, that we are unable to get the same results as other chemists on the same steel. The discrepancy between us in a case which I now have in mind is about half a hundredth of a per cent. working on a steel containing less than 0.05 per cent. of phosphorus. After a good deal of experimenting this discrepancy has finally been traced to the method. If we use the method employed by the other chemist, we get the same result that he does almost to a thousandth of a per cent. If we use our method, we get five thousandths of a per cent. more and this constant difference is maintained by comparison on several steels, the determinations being likewise duplicated several times. Furthermore, quite a number of other chemists, working on the same steel, and using our method, get the same results as we do. Some of them within a thousandth of a per cent. and nearly all of them within two thousandths. So that we are compelled to conclude that the discrepancy we are considering, is wholly one of method. I might give a number of illustrations on this point, but no doubt your own work will furnish you with illustrations.

All I am trying now to impress you with, however, is this thought, viz., that method is a frequent cause of discrepancy between chemists. This being granted, I ask again, what is going to be done about it? Two chemists each make an analysis, and there is a commercial transaction behind the results, we will say,

and they are both equally honest, both are equally able, but they do not agree, and when they come to compare, they find that one has used one method, and the other another method, and each thinks he is right, because each has used an approved method, each can go right to the books, and show that their method is recommended as one of the very best methods, and their experience entitles each to think, that it is a good and correct method. Furthermore, both are equally tenacious of their views, and as far as I can see, both have an equal right to claim that their results are correct. Again I say, what are we going to do about it? I see only one way out of the difficulty, and that is to use standard methods. I make a plea to-night for the establishment of standard methods by some authority. I see no other remedy for the difficulty except to all use the same method.

Now, before we go into that matter, I would like to say that there are two or three questions that doubtless arise in your minds in regard to the advisability and possibility of establishing standard methods. Suppose the only known method that is available on account of speed and amount of work required is not quite as accurate as another method which cannot be used on account of the labor and length of time that it takes to get a result. What is to be done in such a case? My answer to that is this: Simply use the best you have until you get a better. I am quite confident that commercial men who are using and basing commercial transactions on the results of chemical analyses will not be annoyed by an error in analysis, provided they know it is an error and can discount it. Let us suppose a case. Let us suppose that some firm in this city has bought 5000 tons of Swedish pig-iron on the guarantee that it shall not contain more than three-hundredths of a per cent. of phosphorus. Now, the method by which the phosphorus is to be determined is a necessary element in the problem, because different methods will give different results. Let us suppose, further, that there is a standard method in existence, recommended by some reputable body of chemists and known, for instance, as the method of the Engineers' Society of Western Pennsylvania. Let us also suppose that the method which they recommend has an inherent error in it of five-thousandths of

one per cent. The transaction would go on just exactly the same. The only precaution that would be necessary would be that whoever made the contract should allow for this inherent error and then specify that the phosphorus shall be determined by the standard method of the Engineers' Society of Western Pennsylvania. This is not entirely a new idea. Very many commercial transactions to-day are done in exactly this way. For example: As you all know, the phosphoric acid in commercial fertilizers is determined by the standard method of the official agricultural chemists. Again, at the World's Congress of Chemists, I met a gentleman who is connected with a large manufacturing establishment in New York City, and they buy crude cream of tartar, separated from the wine abroad, by the shipload, and he said, "We make contracts which last two years, and every contract that we make contains as accurate a description as we can give of the method by which the constituents of the cream of tartar are to be determined. Usually, by the time the first contract runs out, we know that the specified method is erroneous. We, however, use it until the expiration of the contract. That is to say, we have learned more about the determination of tartaric acid and potash and the impurities that occur in cream of tartar at the end of two years than we knew when the contract was first made. But we have no other way. When we first began, we bought cream of tartar on certain guarantees, but the chemists were so wide apart that it was constant arbitration all the time. We had to meet the difficulty by specifying the method to be used." Now, I say, if there is in the best and most available method at the time an inherent error, all we have to do is simply to recognize the error and base our contracts accordingly; and I am pretty confident, from my talk with commercial men, that this difficulty of a slight error is not one of vital importance. Indeed, one of them said to me not long ago: "The great difficulty we have to contend with to-day is not the error of chemical analysis, but the discrepancy between chemists."

There is another thought that comes up: What effect would the establishment of standard methods have on the profession? Will it not retard progress? Will not chemists simply become

routine men, and do nothing to advance the science, simply because the methods are all fixed and definite? This is a fair question. My own judgment in the matter is that it will stimulate investigation and research, for the simple reason, that if I may judge from my experience at all, if a man puts himself up as a mark to be shot at, he is pretty sure to get shot at. I am pretty confident that the publication of standard methods would do more to develop the progress of chemistry, so far as analytical methods are concerned, than anything else that could be done, simply due to this single fact, that the chemist who makes an investigation, and finds a hole in one of the standard methods, which has been approved of by a body of chemists, will certainly get more credit, and will certainly bring himself into greater prominence, than if there had been no standard methods in existence. So that it seems very probable that instead of being a drag on, or a stop to progress, it will stimulate progress to have standard methods.

Now we come to a matter that is of a good deal of importance, namely, what is the sphere of a standard method? Can one method be used for all kinds of work, or must a standard method be somewhat limited in its application? This is a point worth considerable thought. If I understand the matter rightly, there are three fields to-day in which chemistry is used, and used a great deal. One is in steel-works and blast-furnaces. Analyses are used by the hundred, perhaps by the thousand, in steel-works and blast-furnaces, for the guidance of those who are making the steel or iron. The special requirement of a method for use in such places is speed. You are all familiar with the fact that with the open-hearth furnace, it is not at all uncommon to make a carbon determination before the final additions are made. Of course the method must be rapid, since it is impossible to hold the metal in the furnace for any long period of time. If it is going to take six or eight hours to get a result, the determination cannot be made. A method that takes more than fifteen or twenty minutes or half an hour, would be simply out of the question.

There is another field in which analyses are used a great deal, and that is as the basis of commercial transactions. More and more every day, iron and steel are being bought and sold on their

chemistry. I may say to you frankly that the work of the chemical laboratory of the Pennsylvania Railroad Company is every day reaching out further and further into the chemistry of steel, and we are relying more and more every day on the chemistry of steel. It is, perhaps, too much to say that we are relying less and less every day on the physics of steel, but it is safe to say that we are supplementing our ordinary physical testing more and more every day by chemistry. On this point I may say to you that one of the best steel makers in this country said to me recently, that he would rather have a chemical analysis than a physical test if he could have only one. That possibly might bear some modification. His illustration was this: There was a boiler explosion in Boston, and by proper manipulation, he got a piece of the steel. That piece of steel was put into the testing machine, and it stood the commonly prescribed test for boiler plate in this country. It would have passed the Navy test, and would have passed the Pennsylvania Railroad test. He put a piece of that steel in a vise and bent it over. It was so brittle that it broke at the third blow. Well, of course, the query was: What is the matter with it? He analyzed it and found 0.13 per cent. phosphorus, which to his mind, he said, gave him a great deal more information than the slow-moving tensile test. Now, to come back to the subject, I say there is an enormous field in which chemical analyses are used, where commercial transactions are involved. The special requirements of a method to be used for these purposes, are speed and accuracy. In a steel works I do not think that accuracy to the hundredth or thousandth of a per cent. is essential. When you make a determination of the carbon, while making a heat of open-hearth steel, if you know within two or three hundredths the amount of carbon, it is close enough for the purpose you have in mind. On the other hand, if you have a specification which requires that the carbon shall not be below .15 and not above .21 or .22, then you must work a little closer. The special requirements, I repeat, of a method to be used to base commercial transactions on are speed and accuracy.

Now, there is a third field in which chemistry is used enormously, and that is to make researches. It is used in the commercial world

to make investigations. A manufacturer wants to know if he cannot make a certain product, and he asks of the chemist what the product contains. Or he wants to know whether they cannot modify their methods in some way, resulting in greater economy, and he asks the chemist to find out. Or the consumer wants to know what kind of steel is best adapted to certain purposes, and he does as we have done twenty times at Altoona: sends out and gets forty or fifty samples of the steel which has been used for the purpose he has in view, some of which have done good service and some bad service, and makes an analysis of them. The special requirement of a method for that kind of work is accuracy, for you want to get as near the truth as you can.

There are, then, three clearly defined fields in which chemistry is used, and used enormously, and maybe we shall find that some methods cannot be used in all three places; it would be most delightful if they could. Let us repeat. Analyses are made to guide the steel-maker where speed is the great requirement; analyses are made to base commercial transactions on where speed and accuracy are the great requirements; and, third, analyses are made for the purposes of investigation where accuracy is the great desideratum. Now, for whom shall we make standard methods? For the steel-maker, the commercial man, or for the investigator? This is certainly a problem which will have to be decided before we can go ahead with our work. I have no doubt you will find advocates for each of the three. I know a chemist who says that the utmost accuracy is none too good for him; it takes him about a week to get results, sometimes. Others, no doubt, will say that the results that are obtained in steel works with rapid methods are sufficiently good. My own judgment is that, taking into account the importance of the work done, the standard methods that we are discussing will, perhaps, have to be the ones that are to be used as the basis of commercial transactions. I suppose that 90 per cent., perhaps, of the chemical work done in this country is done as the basis of commercial transactions, and so I propose that the standard methods shall be the methods that can be used as the basis of commercial transactions.

What, now, are the requirements of a standard method? First,

it must be sufficiently accurate. But what is sufficiently accurate? Accuracy is simply a relative term; we do not know the atomic weights to-day; I do not know that we ever will. What is sufficiently accurate for commercial transactions? I do not know. But I have proposed the following limits as possibly sufficiently accurate. With our present knowledge of metallurgy, and our present knowledge of the influence of various substances on the quality of iron and steel; if we know within the limits which I shall give you in a moment the content of the various substances in iron and steel, we know about all that is really useful to us. These limits are Carbon within a hundredth of a per cent., phosphorus within five thousandths, sulphur within five thousandths; silicon within a hundredth, manganese within a hundredth, and copper within five thousandths. Some of the methods we are using to-day will work closer than these limits I think. But a method which will not, in the hands of a fairly good chemist, give results within these limits, I think is hardly a sufficiently good method to be regarded as a standard method.

Another requirement of a standard method is that it shall be sufficiently rapid. But, again, what is sufficiently rapid? Already, this evening, I have been talking with one of you, and he said that a method which required three and a half to four hours was not sufficiently rapid. Of course, we want the shortest possible time, but we cannot sacrifice everything to speed. As I have already said to you, I am inclined to think that the method of the steel works, especially for certain substances, is not sufficiently accurate, although it is sufficiently rapid. Half an hour for the determination of carbon by the color test is possibly all that is absolutely essential to give you the indication that you want, but to base commercial transactions on, we want about an hour and a half for a combustion. So the question is: How rapid must a method be in order to be regarded as a standard method? It is obviously very difficult to place any limits. I might propose this: If you have your sample in the morning, and cannot get a result the same day, I do not think the method ought to be regarded as a standard method. That is simply my own opinion in the matter. My experience is this: If a man puts the sample

in your hands this morning and says, "When can I have the result?" you say to him, "This evening," that is fairly satisfactory. I think results in that time will fairly well meet the commercial demand at the present time. Undoubtedly, as time progresses, we will make tremendous strides in the matter of time. I can remember very well when two days was the shortest possible time, with the utmost that you could do, for a phosphorus determination or for a manganese determination. But I propose, as I say, that sufficiently rapid shall be regarded, at least in a preliminary way, as a day. Possibly we will shorten this time; within the next two or three years quite considerably, perhaps; get down to half a day; that is, take your sample, and in a half-day's work, or four hours, perhaps, from the time you get the sample, you can give the result. We can do this now, as you know, with some substances and with some of the methods.

There is another question, rather closely connected with the question of rapidity, in regard to standard methods, and that is: "How much work can you turn out in a day?" It is obvious that if the method is so laborious that you work all day on one sample, although you come within the requirement of giving the result at night, if you had your sample in the morning, yet if the method is so laborious that you have only one analysis at night, it will be an expensive analysis. Therefore, the amount of work that a man can turn out in a day must be regarded as an element in the problem. The amount of work required to make an analysis must be considered when we establish standard methods, and we should guard against establishing any method as standard that would limit the output of a single chemist too greatly. It is very hard, of course, to draw any line on that point, because there may be a transaction like this: In the older days, when I was a student, my teacher was the expert of a large firm in Philadelphia who sold ship-loads of nickel matte. This nickel matte was sold abroad on analysis. It not infrequently happened that the chemist on this side of the water and the chemist on the other side would differ a tenth of a per cent., and I happen to remember one case in which the results differed a tenth, which would amount to some thousands of dollars in a ship-load. When the case was

brought to my teacher, he said: "Well, I have always said that I could not work closer than a tenth of a per cent., and it may be that the chemist on the other side is right. My duplicate analyses, take all the care I will, on nickel, will disagree about a tenth where the amount of nickel is up to 80 or 90 per cent. I don't think I can do much better work than that. However, I will repeat my work, and the chemist on the other side had better repeat his work." In this single case I happen to know it was done, and the second analysis on the other side confirmed my old teacher's work. All I intend to illustrate by this story is, that in so large a transaction a week's work would not be out of the way in order to get an accurate result. On the other hand, many times we all have a great many analyses to make in a day, and if we took a week, or if the method was so laborious that it took even one whole day, to get one result, the consequences would be that we would have a good deal less chemical work to do than we are now doing. The cost of the analysis must come in as an element, without any question, and I would say that a method which was so laborious that a man could get only one or two results in a day's work could hardly be regarded as fit for a standard method.

There are one or two other points which I will touch on briefly. A standard method must be so well understood, and the directions so definite, that different chemists will get the same results with it. I will say for your information, that when we decided, a little over a year ago, to publish our methods, and make them standard, so far as the Pennsylvania Railroad purchases go, this point was one that caused us more thought and discussion than any other single point, namely, is it possible for us to put into print a method so well described and so carefully worked out, that five, six, eight or ten chemists, working on the same sample, will get the same results with it? All of us who are working daily in our laboratories know how peculiarly annoying it is to get results that do not agree. I do not know how much work you do here in duplicate. I will say, for your information, that we never raise a question over any shipment of material that is shipped to the Pennsylvania Railroad until we have made duplicate analyses of

it. Our regular method is this: A sample comes in from the shipper of material that has been bought on definite specifications. Our duty is to see whether that sample corresponds with the specifications. We make a single determination, and if this comes well within the limits of the specification, we accept the shipment without further question. On the other hand, if the first determination is close to the limit of the specifications, we make a second and sometimes a third before reaching a final decision, and especially is this true if the method used is subject to some uncertainty. So I say, as doubtless your own experience teaches you, some methods are not well enough worked out, or are not sufficiently well described, so that in the hands of different chemists they give uniform results, and it would be unfortunate to choose such methods as standards. Still further, there is an inherent difficulty sometimes in a method. Let us suppose a case. The precipitate that we are washing is perceptibly soluble in the wash water. How are you going to describe to a man how much to wash that precipitate? Under-washing is wrong; over-washing is wrong; and it is not always easy to describe where to stop. In preparing standard methods, such questions as these will, undoubtedly, have to be carefully considered.

But I am occupying far too much time. Let me tell you briefly what has been done toward securing standard methods. As you all know, we have issued at Altoona, during the past year, three methods to be used as standards when Pennsylvania Railroad purchases are concerned. These are, phosphorus in steel, carbon in steel, and sulphur in steel (just out), and the method for the determination of sulphur in pig-iron is pretty well under way. At the World's Congress of Chemists, after this paper that I have referred to was read, it was discussed a little, and the Congress referred the matter to the Committee on International Standards. These seven chemists in this country who constitute the American Committee on International Standards I have already spoken about were asked to take the preliminary action necessary to secure standard methods. After a consultation with Professor Langley, it was decided to appoint a sub-committee of five to take the question under advisement, and to recommend, through some source

not yet decided on, standard methods to the profession. That is as far as we have got. The sub-committee has not yet been quite fully decided on, but the probabilities are that it will be decided on in the course of the next four or five days, and then the committee will get to work. Just exactly how the methods, after they are decided on by the sub-committee, will be brought forward and recommended to the chemists, and what further action will be taken, cannot, at the present moment, be stated. Two points seem to be fairly agreed on among chemists: First, that there is a very great need of standard methods; second, that the committee who recommend the standard methods should be constituted in such a way as to represent (and I may say that is now being done) the manufacturer, the consumer, the commercial chemist, and the professorial element, if I may use the word.

Before I sit down, allow me to call your attention to another set of figures on the blackboard, and to give you a point or two in connection with them:

	1.	2.	3.
a, ...	1.435	1.44	1.430
b, ...	0.815	0.80	0.815
c, ...	0.450	0.45	0.448
d, ...	0.152	0.185	0.168

These figures represent carbon determinations made on the same steels as in the former case. The results shown in column No. 1 were obtained by dissolving the steel in acid chloride of copper and potassium solution; the results shown in column No. 2 were obtained by the chromic-acid combustion method; the results shown in column No. 3 were obtained by a wholly different method, which I will describe a little later. I will say for your information, that the results shown in column No. 1, were obtained at our laboratory at Altoona, and the analyses were made in exactly the way that is described in the proposed standard method which we have published for the determination of carbon in iron and steel. The results shown in column No. 2 were obtained by Professor Langley, using the chromic-acid method, in a special all-glass apparatus which he obtained in Germany, and which

avoids the use of rubber-corks, and some of the other difficulties connected with the old Uhlgren method of determining carbon by chromic acid. The results shown in column No. 3 were obtained by the Swedish chemists, Pettersson and Smett. The chemists put half a gramme of the borings in a sort of flat U-tube, containing bisulphate of potash. On applying heat the metal is dissolved, and the carbon converted into carbon monoxide, or carbon dioxide, and at the same time large quantities of sulphurous acid are formed. All the gases formed are taken along over red-hot solid chromic acid, by which the SO_2 is converted into SO_3 and retained, the CO, if any, converted into CO_2 and this gas later is measured in an eudiometer tube. You will observe that the three methods employed are more or less independent of each other, and yet, surprising to say, the results are almost identical, except in steel "d." On the other three steels, the widest discrepancy is a hundredth of a per cent. With regard to the "d" steel, I may say that we made seven determinations, and could not get any different average figures, the range being from 0.148 to 0.157 per cent. Professor Langley said he thought his figures were a little high. He made only two determinations. The Swedish chemists made five, getting results varying from 0.163 to 0.175 per cent. We find, by checking up, that they had only a little over one and a half cubic centimetres of gas to measure on this steel. The apparatus is supposed to measure to one one-hundreth of a cubic centimetre, so the discrepancy on this steel is unexplained. I may say, that steels "a," "b," and "c," are crucible steels, while "d" is an open-hearth steel.

Now, there are two points which, to my mind, are very interesting in these figures and statements. First, it sometimes happens that different and independent methods give agreeing results; and I am frank to say that, if all the different methods in use for determining the various constituents in iron and steel gave results as closely agreeing as those shown on steels "a," "b," and "c," I do not think there would be any need of standard methods. Unfortunately, this is apparently not the case. Second, the most interesting feature, however, of these figures is this: It has been, for a long time, an unsolved problem whether, when steel is

dissolved in any solvent for the purpose of releasing the carbon, in order to determine it, as in the ordinary combustion methods, any of the carbon was left in solution, or any of it escaped as a gas, or, in brief, whether, with the solution methods, we get all the carbon. To my mind, the results given above seem to indicate that this question is pretty well settled in the affirmative.

Discussion.

The Chairman: We are very much obliged to Dr. Dudley for throwing so much light on the subject of standard methods. Still, I think some of the gentlemen here are ready to shoot off their guns, since the Doctor is ready to stand up and be shot at. Is it the idea that these standard methods are to be adopted by the committee that is to be appointed?

Dr. Dudley: As I say, the World's Congress of Chemists referred the matter to the Committee on International Standards, and they, after a conference, decided to appoint a sub-committee who would propose standard methods. I do not know how the standard methods can best be brought forward; that will have to discussed. They might be brought forward through the American Chemical Society, and say that the American Chemical Society recommends such and such a method. On the other hand, one of the influential members of the American Chemical Society says that he does not want to have the American Chemical Society put itself on record as approving anybody's method. So, the whole question of how the matter will be brought forward is really in abeyance. Of course, these methods cannot be obligatory. I think everybody will clearly understand that. There is no power, as is the case with the Agricultural Chemists. The Agricultural Chemists are an official body, acting with Government approval, and with their State approval. They have meetings once or twice a year, and, as I understand it, each experimental agricultural station sends an official delegate, and what those delegates agree on becomes binding upon all agricultural chemists, until changed by the same authority. But our thought was, that if the Committee on International Standards should recommend certain methods as standard methods, it would be but a little while until the com-

mercial men would insert a clause in their contracts to the effect that the constituents of the material should be determined by these recommended methods. That would cover all the ground. I should state one point further, namely, that most of the chemists who have said anything on the subject felt that it would be essential that the method should be revised frequently. Everybody can see the wisdom of that. Undoubtedly, the first six months after the publication of a standard method would see great changes in it, because everybody would be shooting at it. Every man who sees a flaw in a method, and brings that flaw to light, is certainly doing a public service.

MR. J. O. HANDY: I have before me the method for the determination of sulphur in steel, which Dr. Dudley has just issued. I would like to ask for what reason he chose this method of working; finally weighing the barium sulphate is preferable to the shorter method with iodine. I presume he would not make himself unnecessary work, and therefore must have found some defect in the other way of working, or, possibly, due to the consideration of the fact that sulphur might go off in another form than H_2S.

DR. DUDLEY: Do you mean bromine instead of—

MR. J. O. HANDY: Instead of cadmium as the absorbent, and finally weighing the barium sulphate, instead of titrating the sulphur in the cadmium sulphide with iodine.

DR. DUDLEY: We made a good many experiments on the determination of sulphur by the use of cadmium, and then we abandoned it. We used to weigh the cadmium sulphide, however, and we found, if I remember rightly, that there was danger of forming an insoluble oxy-salt of cadmium, which would, of course, cause error. So far as the titration with iodine is concerned (I guess all chemists have crotchets; I know I have), we never succeeded in getting along very well with iodine. The necessity for the frequent standardizing of the iodine solution, and the difficulty of getting good iodine and iodide of potassium, are such that we never exploited the method much in our laboratory. Furthermore, as has been suggested, there is some evidence pointing in the direction that some of the sulphur may come off in some other gaseous form than H_2S, and thus escape. We do

not regard the question as settled yet, but in view of the uncertainties, we did not feel quite ready to adopt the iodine method.

MR. WEED: You say that for carbon you consider a hundredth as a reasonable limit of error. Would you adopt the same limit no matter what the carbon content of the steel was?

DR. DUDLEY: That is a good point. What I mean by a limit of a hundredth is this: If you are making carbon determinations by the best-known method, that of combustion with all the care you are capable of, I do not think that, in general, you can make a series of twenty duplicates that will not differ as much as a hundredth. If you happen to have five bright days, and make four combustions each day, you might get them within a hundredth; but, naturally, you will differ a hundredth easily in duplicates if there comes up a shower between two combustions. The differing hygroscopic condition of the atmosphere easily makes a difference. If you will take your potash bulb and weigh it once an hour throughout a working day, leaving it stand perfectly still, and doing nothing with it except to weigh it once an hour through a working day, and then calculate the results based on your ordinary practice (ours is three grammes), you will find you may very easily get a hundredth difference in the weight of your potash bulbs. Now, what I meant to say by the limit of a hundredth is, that the method is capable of being worked to a hundredth easily if the conditions are absolutely uniform, and that is fairly true with high or low steel. Of course, we all recognize that the limit of error should be somewhat larger for a very low steel than for a high steel. I do not know but that it is fair to say that a hundredth is moderately close, and yet I was speaking, you understand, not of the average results you will get, but of what the method is capable of.

MR. WEED: For instance, with pig-iron containing about 3 per cent. carbon, would you consider that a method giving results within two-hundredths would be a good method?

DR. DUDLEY: I should think so. Really, I do not know how you could realize results any better than that.

PROF. F. C. PHILLIPS: I think it would have been difficult for any one to present the side of the standard method more fully

and ably than Dr. Dudley has done. He has given arguments which seem to be absolutely convincing. But I think there is one thing that will have to be considered. There are, I think, two or three cases that would have to be distinguished. In the first place, there are certain lines of investigation where analyses have to be made that only lead to discordant results unless every detail of procedure is regulated by a conventional rule. This has been the case with tannin determinations. A method had been proposed for the determination of tannin by titration with permanganate. It was found, however, that the correctness of the results depended upon absolute uniformity in what appeared to be matters of insignificant detail, and that the method could only be used in assaying the strength of different tanning liquors, provided the details were settled by some one authority.

There were so many possible errors there that it was a common thing for different chemists to use what appeared to be the same method, and get different results. The rate of addition of the permanganate solution in titrating made all the difference in the world in the result of the determination. Unless there were some conventional method, it would be utterly impossible to determine tannin. Then, when a method was adopted, the difficulties were so great in getting absolutely constant results that before long the very chemists who had been active in establishing this method had given it up, and many of them were attempting to get out the tannin by direct processes—either determining the specific gravity of the solution before and after precipitating or by direct weighing. There are other cases like this. For instance, the determination of butter fat. Something in the way of a conventional method had to be adopted, or nothing concordant would be possible. In Germany it is a common thing for a law to be passed prohibiting the use of poisonous substances in certain kinds of food, poisonous colors in confectionery, etc. Such laws are extremely explicit as to punishments for its violation, and it is absolutely necessary that the Government shall at the same time lay down the rules for the methods to be used in detecting the poisons. This is another case where the adoption of some standard method cannot be avoided. But now, when we come to such fine work

as the determination of phosphorus, carbon, and sulphur in steel, we have to remember that it is really professional work of a high grade, and a chemist stands in a position towards the man who buys and sells these products that is not very often honored and appreciated. Suppose a medical man were called in to treat a case and he were told that he should, if possible, use a standard method, or should select his remedies from a standard work, or that he should spend not more than a certain number of days in the treatment; probably he would consider himself so insulted that—well, there is no necessity for discussing the matter further. Think of a lawyer in the same position, or an engineer. These men are called upon to do work of a scientific kind, but they set their own time, and that ends it. Now a chemist is called in to do some such work as this; it is true, very often, the work is of a kind that can be turned over to some one who has had very little education, but still it is scientific work, requiring, on the part of some one, the most careful study and acquaintance with the journals, with what has been done all over the world in improving methods, what is being done. Now there is nobody less appreciated, I believe, than the chemist when it comes to actual scientific work. He is looked upon as a man who simply pokes a microscope at a thing and determines exactly what is in it and what it is worth. I know of a case in Pittsburg where a farmer suspected that his cow had been poisoned, and came to a chemist with a portion of the cow in a basket, and in the other arm he carried some butter—a pound or two. He proposed to pay the chemist with the butter for making the analysis.

A gentleman informs you that some of the soil on his land contains iron, and he brings you a sample of the mud which he wishes you to analyze, and presents you with the sample of the mud as your pay for the analysis. That happens with educated people. There is an idea that chemical analysis is a thing that should be done all at once, and right off while you wait. That cannot always be done, and I think in adopting standard methods this would have to be very fully considered. I would not urge this absolutely as an argument against the adoption of standard methods, but I do think that the chemist's time and education should

be considered when a commercial man comes to him and says he wants an analysis, and wants it in so many hours, and wants it accurately done. They have adopted standard methods in other countries. A society in Germany adopted some standard methods about three years ago for the analysis of iron and steel. In regard to one constituent of iron and steel,—manganese,—they laid down certain directions, but it was not long before the methods they proposed were rather severely criticized. They preferred permanganate titration in the case of ferro-manganese and other manganese alloys, and they rather objected to the chlorate of potash oxidation. But it was said that of forty-five iron works, nineteen adopted the chlorate method, rather in opposition to the recommendations of the commission who investigated the matter. That is, within a year, nearly half of the number of iron works had gone back and adopted the method that was originally rejected. The chlorate method was adopted by a society representing the Government railroads in Austria, and the German commission was somewhat annoyed by the fact that in the United States the chlorate method was so much used. Standard methods were adopted for testing lubricating oils used on the German Government railroads not long ago. There is another case like that of tannin and butter where absolutely conventional methods are really necessary. But even with the most absolutely exact and explicit directions it was said that not long after the rules were adopted samples were sent, by way of experiment, to the Government testing laboratory at Charlottenburg, near Berlin, taken from a single barrel of oil. Of two samples taken from the single barrel one was rejected and the other was accepted, and it was found out afterwards that the reason was that one sample was taken from the side of the barrel and the other from the centre. More explicit directions for taking samples were sent out. Standard methods are open to these serious difficulties: That they so soon lose their value; they must be modified; there must be additional directions given in regard to them, so that really it is no longer a standard method, but the standard method modified by A, or by B, and so on. I think many of Dr. Dudley's arguments were extremely interesting.

Dr. Dudley's proposition that methods that have been thoroughly tested and found to be good in the Pennsylvania Railroad laboratory should be offered in the way of suggestions to other laboratories is a most excellent one. A method which has been found good in this laboratory, which has such a very large practice, would be accepted for that reason in almost any laboratory in the State. As Dr. Dudley said, the method is offered to the different laboratories, and criticisms invited on it, and they are asked to use it if they find no objection. That is an admirable plan. It may then be approved by individuals without any attempt to give it the stamp of conventional authority. Suppose we adopted a standard method in Pittsburg? Unless that could be adopted in Germany and England, and in the West and in the East, it really would not be altogether a standard method. It would be binding on so few. The greater the territory you cover with the standard method, the greater will be the objections made to it, and the greater the difficulty in getting any changes made that may be necessary.

Dr. Dudley: The point that Professor Phillips raises, that chemists are not regarded as they ought to be regarded, I quite heartily sympathize with. But, on the other hand, I must insist, that although I have been at it for eighteen or nineteen years now, I am perfectly willing to stand here and say that I think the reason why chemists are not regarded with the consideration with which they ought to be regarded is their own fault. That is a pretty hard statement, I know. But the fact that I have tried to din into your ears this evening, that a miner or a manufacturer takes his ore or his product to you or to me, and gets a different result from each of us is the very fact that makes him think that a chemist is not worth a cent. The fact that analytical chemistry to-day does not stand on the footing on which it ought to stand is the fault of the chemists, and no amount of standing on our dignity, claiming that we have studied, and that we are educated chemists, will ever remedy it. We may as well look this thing square in the face. We must adapt ourselves to the situation, or else we are going to get left. The very fact that any one can give a piece of steel to a dozen different chemists, and get a dozen dif-

ferent phosphorus determinations out of it, is the thing that throws obloquy on chemists and chemistry. That is my text. I am perfectly willing to stand and fight on it for a good while. You are only what you show yourself. You are not a chemist if you cannot give results that are safe to tie to. Every man has his own pet theories and pet methods of work (I am just as bad as the rest of you), and it is this fact that makes people think that chemists do not amount to much. If you can have such a standard in the profession that it makes little difference who does the work, you get the same results in any case, chemists will be respected. That is my feeling on that point.

Mr. Weed: Last year you gave, among the sources of discrepancy, the chemist. I do not suppose that in any case these standard methods would be adopted in all laboratories for the ordinary working methods. Therefore the ordinary iron and steel chemist would not be very familiar with their working. Do you not think that would be a source of error in itself? Every man has crotchets; one prefers permanganate titration, another bichromate titration. If you make the standard method bichromate titration, and if in 99 determinations in 100 that he makes he makes with the permanganate method, the fact that he is not familiar with the standard method would necessarily make that less accurate in his hands than the method he was using, even though the method he was using might be inherently less accurate than the standard method.

Dr. Dudley: I am very glad you raised that point. I will say, in regard to that, that I wish I had had more experience with the methods that we have started in to publish than I have had. These methods are prepared in this way: We get the matter ready, putting the best into it that we know; then we put it in print, and have a number of proofs struck off, and send to each purchasing agent on the Pennsylvania system about a dozen copies each, and ask them to send that method to everybody from whom they desire to purchase material to which the method applies. For instance, with the method for the determination of carbon in steel, send to all steel makers from whom you desire to purchase steel, and ask them for criticisms on the method. We have some

very interesting correspondence on this subject. Then, also, I send out to about a dozen chemists—friends of mine, who have had some experience—a copy, with request that they give me any suggestions that they may be willing to make on the method. This takes a month or two, sometimes three months, before we get all the correspondence back; sometimes we have to revise the method, and send it out the second time for criticism. That is the way in which the methods are prepared. However, to meet your question. The problem as to whether a method is so definite, so well worked out, and so well described, that in the hands of a dozen or twenty men—chemists of ordinary experience—the same results can be obtained with the same sample, without daily experience with the method, is really the question which you ask. Now, on that matter let me say this: When the phosphorus method was first prepared, it was prepared by myself and my principal assistant, working constantly on it. I suppose we made 100 determinations to prove up various points before we put anything on paper, and we tried to cover every point that was uncertain, and then had to leave some uncertain, as you will notice in the matter of arsenic. After we did that we had some proofs made. I put these in the hands of each of three other assistants in the laboratory, giving them all the same sample of steel. "Now," I said, "make three or four or half a dozen determinations; I don't care how many. Lay aside all your other knowledge, and do exactly as that paper says; follow every detail there described." I think each one made four determinations, and the extreme limits of the four determinations (it was on low steel, about .04 per cent.) were, I think, about seven-thousandths. With three different chemists that was fairly encouraging. Then they went through with it a second time, making a series of four determinations each, and we developed one very interesting point. As we are all chemists, I suppose you will enjoy all the chemical points. The directions you will find in the paper are to wash the yellow precipitate with acid ammonium sulphate wash-water until nothing reacts with sulphide of ammonium. You are washing out iron and molybdic acid. If the sample steel is pretty low in phosphorus, the yellow precipitate comes out pretty fine, and

sometimes it is a little hard to hold, and it has a tremendous disposition to crawl up to the top of the filter. One of the boys was so anxious not to get it up on the top of the filter, and lose a little of it by adhering to the funnel or washing down through, that he did not quite wash the top of the filter clean. A little molybdic acid was left in the top of the filter, and when he filled the filter with ammonia, a little later on, to dissolve the yellow precipitate, he got this molybdic acid with consequent high results. You will find a precaution in the paper now to take pains to wash to the top of the filter. The second time, my remembrance is, all came within four-hundredths. That was moderately encouraging. The thing that I felt the most uncertainty over was whether it is possible to put into print, under the name of a method, sufficiently minute directions so that a man of ordinary chemical experience, not accustomed to the method—not having been trained to it—would get fairly concordant results with it. You may remember that it is announced in this method that if anybody wants a sample of steel to check himself on, we will send it. We took a piece of boiler plate about two feet square, and laid it aside. We bored out a lot of holes, and got several pounds of borings. Samples from these borings have been sent to twenty chemists, perhaps, who have asked for them. Most of these have sent us their results, using our proposed standard method, and by far the largest percentage of those who have done so have come within one or two thousandths of a per cent. of our figure; so that I am a good deal more hopeful than I was a year ago that a method can be so well worked out and so well described, that in the hands of different chemists it will give fairly concordant results even without special experience with it. I presume, after we have had a dozen tussles or so with the steelworks chemists, we will know more than we know now on the subject.

Mr. A. T. Eastwick: I notice that the method for phosphorus is volumetric, and the one for sulphur is not volumetric. As far as I know, I do not think that either of those methods is in general use in the steel laboratories in the Pittsburg district, and I would like to ask whether any of the other methods

have been tried to any extent in the Pennsylvania Railroad laboratory.

DR. DUDLEY: Do you mean for phosphorus or for sulphur?

MR. A. T. EASTWICK: Both. I would like to know whether the method by weighing the yellow precipitate for the determination of phosphorus, and the method of determining sulphur by precipitating as cadmium sulphide and titrating with iodine, have been compared with the methods issued or not.

DR. DUDLEY: I will say that before we decided on the method for the determination of phosphorus we thought it would be essential, in view of the uncertainties that are believed to be connected with the molybdate method, to have some steel in which we knew the amount of phosphorus. There is no agreement among chemists as to the ratio between phosphorus and molybdic acid, and the ratio between molybdic acid and iron, at least when the yellow precipitate is obtained under varying conditions, and, therefore, we simply did not feel that we could rely on the theoretical constitution of the yellow precipitate. So we took three samples of steel and determined the phosphorus by the acetate method as described by Blair. We then made a molybdate magnesia determination in the regular way, taking a couple of days for it, according to the old standard method. We did not get any results that agreed, and finally we traced the discrepancy down to the difference of method. So we determined the phosphorus in our samples in still another way. We proceeded exactly as Blair describes up to the point of adding the bromine to oxidize a little of the reduced iron to carry the phosphorus before we make the basic acetate separation; but instead of adding a few drops of bromine we add sufficient bromine to oxidize half a gramme. We now think we have all the phosphorus that was in ten grammes of steel in half a gramme of the iron. Now, we make the basic acetate separation and have the phosphorus concentrated into half a gramme, and then treat it just as if we were going to make a molybdate magnesia determination. In this way we have the advantage of both methods. We have the advantage of the acetate method for concentrating the phosphorus into a small portion of the iron, and then have the advantage of the molybdic acid method

for separating the phosphorus from the iron. But the old molybdate method, as every chemist knows, has two or three almost unavoidable sources of error. It is not at all uncommon to get a little free molybdic acid down with the yellow precipitate, some of which may go along and finally be weighing with the phosphate of magnesia; and, also, you may have a little silica and a little iron along with the final form. I do not think that any chemist who has had experience with the molybdate method has ever succeeded in completely overcoming all these difficulties. To get over them as far as possible, we dissolved the yellow precipitate in ammonia, and then passed sulphuretted hydrogen right into the ammoniacal solution. This wrinkle we found in Hundeshagen. You can convert molybdic acid into sulphide in an alkaline solution very readily; everybody who has tried it knows how difficult it is to get it out of an acid solution. After it is so converted, add a little hydrochloric acid, and all the molybdenum separates. Now, we have our phosphoric acid in a solution free from molybdic acid, and with but a little ammonia salts present. The phosphoric acid is then precipitated with magnesia mixture in the regular way.

In that way we found the amount of phosphorus in the three standard samples. Then we used such a method of calculation with our volumetric method as would bring the results of the two methods together. It happens that this gives the theoretical calculations that are given in the method as published, which do not agree with a good deal of other published work, namely, the ratio of 90.76 for molybdic acid to iron, and 1.90 for phosphorus to molybdic acid. You will find in chemical literature for the ratio between molybdic acid and phosphorus all the way from 1.54 to 1.90. As to other methods, we have weighed the yellow precipitate, and our results agree pretty well with the titration method, but we are always afraid of silica. Moreover, I think I prefer a good volumetric method to the balance, as far as manipulation goes, if it is equally as accurate. We cannot find that the volumetric method is any less accurate than weighing the yellow precipitate. As to the method which our Secretary proposed, we tried that, and got practically the same results that we did with the

method we recommend, and the reason we did not think it advisable to adopt that instead of the permanganate method is that it requires two extra solutions. Every laboratory, at least all commercial laboratories that I know of, keep permanganate. But with Handy's method you must have standard caustic potash and standard nitric acid in addition, and we could not see any increased advantages to compensate for that. I have already spoken about the sulphur method.

To conclude, let me say that in any attempt to introduce standard methods, there will doubtless be a great deal of friction. Prof. Langley told me that when he first proposed the question of making an international standard for the analysis of iron and steel in the British Association for the Advancement of Science, the proposition was met with the most bitter feeling until he placed himself very firmly and plainly on record that he did not propose to prescribe methods in any shape or form. There is no question that the attempt on the part of anybody to say that work shall be done in a certain way is certainly going to meet with antagonism. All I can say is, that I think the results to be obtained are worth the struggle. I do not see any other way out of our difficulties. We must stand before the world in a better way than we stand to-day. The profession of analytical chemistry cannot exist and occupy the field that it ought to occupy until commercial men can send their steels to chemists of fair reputation and get the same result from them on the same sample. You may turn it around as you choose ; it is our own fault if we have to occupy a subordinate position, and if anybody will suggest any other method by which agreement can be brought about, I will abandon the whole work of standard methods instantly.

NOVEMBER 21ST, 1893.

The regular monthly meeting of the Society was held in the lecture-room of the Academy of Science and Art, on November 21st, 1893.

Mr. M. J. Becker, President, in the chair. Thirty-seven members were present.

The minutes of the last meeting were read and approved. The Secretary read a transmit of two communications through Max E. Schmidth, Secretary General Committee of Engineers Society, Columbian Exposition, dated Chicago, October 18th, from the Verein Deutcher Ingenieur and the Oesterreichischer Ingenieur und Architekten-Verein, conveying thanks to our Society, among others named in list, for the cordial reception offered to their members at the visit to the World's Fair.

It was moved, seconded and carried that the above correspondence be accepted and placed on file.

The President having appointed Messrs. Thomas H. Johnson and W. G. Wilkins as tellers, R. J. Brown, C. E., was elected a member.

Mr. Walter E. Koch presented the following report on the death of Hugo Blank, which was ordered printed:

Dr. Hugo Blank was the son of wealthy parents. His father built the dykes along the Rhine. He was born at Xanten, Germany, in 1836. After passing through the pro-gymnasium of his native place, he entered the Gymnasium of Emmerich, and later on that of Bonn; thence he proceeded to the University of Bonn, where he held an office. In 1858 he studied chemistry and medicine at the University of Berlin, returning to his old "Alma Mater" of Bonn, in 1859, where he remained three years pursuing his scientific studies. In 1865 he went to Heidelberg, and after spending a year there, he moved to the University and School of Medicine of Paris. In 1867 he returned to Germany, spending one year at Marburg and two more years at Bonn. In 1870 he sailed from England to New York.

After travelling through the country as far as San Francisco he returned to New York and for a while worked in a dynamite factory. Later on he was employed on a New York paper for a year. In 1873 he came to Pittsburg and was engaged as manager and chemist at Hertz & Hostetter's Tar Works. In 1878 he went to the Standard Oil Company. In 1879 he was married and the same year he was elected Professor of Chemistry in the Pittsburg College of Pharmacy. From 1881 to 1883 he was chemist to the Spang Steel and Iron Company. Later on he be-

came professor at the medical college at 28th street, and also conducted a general laboratory. In 1892 he revisited his old home at Xanten, Prussia. He died, after a long illness, on March 18th, 1893, in Pittsburg, aged 57. He was a man of wide information and high attainments, and was highly esteemed by all who knew him. Such a man is a loss to any industrial community.

Mr. R. N. Clark, Secretary, then moved that a committee of five be appointed to nominate officers for the ensuing year, to report at the December meeting, the election to take place at the January meeting. An amendment to this motion was offered that instead of electing this committee it be appointed by the President. The motion as amended was carried.

The President: The Chair will appoint the members later and assign them to their duties.

Mr. Arthur Kirk, after a few preliminary remarks regarding the improvement of our water-ways, and the injustice of appropriations granted for the improvement of the Kanawha River in West Virginia in comparison with those granted our own State, made a motion that the President of the Society at his leisure appoint a committee of three for the purpose of looking after the interests of our own water-ways and see if anything can be done to procure our just proportion of the appropriations.

Mr. R. N. Clark offered as an amendment that the motion be laid on the table until after the officers for the ensuing year have been elected, to which Mr. Kirk objected and after further discussion by Messrs. Johnson, Kirk and Becker, the motion as amended by Mr. Clark was carried.

Mr. George H. Paine here offered for discussion the question of adopting the metric system in the proceedings and plates of the Society. After a prolonged discussion on the part of Messrs. Paine, Brashear, Becker and others, a motion was made and seconded that the discussion regarding the adoption of this system be laid upon the table and taken up at the next meeting. Carried.

THE METRIC SYSTEM.

BY GEORGE H. PAINE.

Mr. President: In discussing, with several members of this Society, the question which I now propose to raise, I have found a considerable diversity of opinion as to the details of the action which the Society should take as a body, although no objection has been offered to the adoption of some rule. For that reason I have decided to bring the question before you in a resolution which meets my own ideas and approximates to the several opinions which I have been able to gather in the short time I have had at my disposal, leaving it to the discussion which will, I hope, be secured, to decide as to the best form in which to leave the matter. Therefore, without further preamble, I will present the following resolution: "*Resolved,* That in papers read before this body all dimensions and quantities shall be expressed in the terms of that system of mensuration known as the Metric System." By this resolution it is also intended to include the centigrade method of registering temperatures.

In all of the great manufacturing countries I believe that the metric system has now been adopted, with the exception of those subject to British rule. In the United States it has been legalized for many years, without securing the least public recognition of it as a system of mensuration. In view of the circumstances surrounding our government, it follows naturally that any radical changes in ordinary practice must generally be instigated by a popular demand, and since the public at large will give a matter of this kind very little thought, the demand must be created by those persons most directly interested. From what has happened, it is quite evident that at least for many years we can expect no united action from the great national technical societies which will encourage the adoption of the metric system by the people of the United States as a whole. It has, therefore, occurred to me that by originating a local sentiment in many different places we shall, in time, secure a better understanding of the question, not

only in the ranks of educated and scientific men but the people at large. Since there is now in nearly if not every large city in the United States some local technical body which has amongst its members many who are also members of the great national societies, it would seem that by much use and a resulting familiarity with the benefits accompanying the use of the metric system in all calculations of quantities, that a more general national sentiment might in a short time be inspired. I shall hope that an adoption of some such rule as has been suggested here will lead to like action on the part of the other local scientific bodies throughout the United States, and eventually to a concerted action on their part, together with an active co-operation on the part of our scientific journals.

As nearly as my recollection serves me, Prof. Mendenhall delivered a very interesting talk to the members of this Society and their friends about three years and a half ago, exhibiting to us different graduated rules and explaining their uses. Prof. Mendenhall discussed quite at length the work which had been done in connection with the metric system towards bringing about a change of sentiment in this country, but I have so far failed to see that any practical result has followed the efforts of this able man. Our President informs me that the German engineers, whose use of the metric system has not extended much, if any, beyond twenty-five years, were, in their recent visit to this country, continually troubled by our reference to feet, inches, quarts, gallons, board measure, etc., which would seem to prove that it is not very difficult to learn a good thing and forget a bad one. This exactly tallies with my own experience during the past summer. I have had the pleasure of meeting and escorting a large number of the gentlemen who have been here to see the World's Fair and our industries throughout the country, and it would be impossible to say how many times they have stopped me, in some explanation I have been giving, to convert our terms into their own equivalents. In this connection let me say that it is very little, if at all, more laborious to convert from the metric system to any one of the different forms of the English measurements than it is to convert from one form of English measurement to another, and this

is a point which, in the discussions of the subject that I have seen, has not been sufficiently insisted upon. Another view which I do not remember to have heard stated is that an enormous number of embarrassing and costly mistakes must be made in converting from feet to inches, from inches to tenths, from cubic feet to gallons, pounds Troy to pounds avoirdupois, cubic yards to cubic feet, cubic feet to perches, and so on *ad nauseam.*

The industrial side of this question cannot be ignored, but when the fact is once admitted, as I presume it will be by most of those here present, that the metric system must eventually become our national system, it would seem that beyond arriving at the proper mode of procedure when it is decided to bring the change about, very little which can be said in a general discussion of the subject will have much bearing at the present time. In this connection, however, I would like to quote a statement made by Mr. F. Howard Livens, of Lincoln, England, Engineer of Ruston, Proctor & Company, who are amongst the largest manufacturers of agricultural machinery in the world. Mr. Livens told me that he was freqnently embarassed by the fact that their system of measurement differed from that employed by the persons to whom they sold their product. It must be remembered that a large part (half at least) of the English trade is with those countries which use the metric system, and that the United States is making every effort to increase her business in the same parts of the world.

I do not wish to detain the Society from a discussion which seems to me of the first importance, and I wish therefore only to say that any consideration of this subject must be accompanied with a full recognition of the fact that the longer the delay, the greater will be the difficulties in bringing about the adoption of the Metric System and that any existing objection will increase in force as time goes on.

Mr. D. Ashworth read a paper entitled

INDIFFERENCE TO BOILER-FIRING AND MANAGEMENT.

Observations extending over a period of a quarter of a century in a practical and professional way have presented opportunities to note, in the greater number of manufacturing establishments, a continuous decline in the grade of service of those in the positions of firemen and boiler-room managers, this corps of operatives seeming, at least, to have remained in *statu quo*. The evil has become so glaring and the results so palpably fraught with disaster, destruction and waste as to warrant an effort to call the attention of those who desire to progress to the false and inconsistent position they occupy by permitting such a narrow policy in management, so widely at variance with true economy, ignoring directly that the better intelligence renders the more valuable and hence more profitable service.

It goes without saying, that during the past ten years the concentration of efforts by scientists and eminent mechanics looking to the more perfect development of the steam-engine in its various types has produced results which challenge the admiration of the most critical in this line of thought.

Within the same period, from every source, there have been a multitude of features in the form of designs and novel application of boilers, all converging to the important factors of increased economy, efficiency and safety. In the engine sphere, condensing, compound and triple expansion engines, with and without jackets; in brief, seemingly all the necessary refinements have received, and are now receiving, close attention. In the boiler domain there has been also the evoluion from the plain cylinder type to tubular, and from that through the multifarious forms of water-tubes, each striving for a superior degree of excellence. Combining these forces, viz., the boiler and the engine, the amount of research and practical application that have been and are being applied for efficiency and economy are such as to be incalculable. A retrospect of the past, viewed in the light of present results, shows that these efforts have been of an exceedingly fruitful character.

The development has carried with it the imperative advancement of those in charge of engine management to such an extent as to create almost anew this body of men. Such an intellectual advancement in the department of mechanics, we believe is without precedent, and, in every sense, challenges universal admiration from every quarter. Notwithstanding these favorable features, we are constrained to say that all this is somewhat like the play of Hamlet, with Hamlet left out; or, in other words, we are radically defective at the very threshold of this field, by reason of relegating the firing of boilers to the most ignorant of operatives; or, to put it in a plain way, there seems to be an almost unanimous idea that any one who can shovel and throw fuel is good enough for a fireman. Close observation and contact, for a period of years, with numerous plants of varied character, increase the conviction upon this point. Recognizing, as we all do, that the furnace of the boiler is the prime feature and great initial point from which is the source of power, does it not properly follow that, if economy and efficiency are deserving of efforts in the advanced stages, as has already been pointed out, this is the very point that should be treated with every consideration of intelligence? Should not the fuel, furnace, and boiler, receive the thoughtful attention that the engine receives from the careful engineer? I think this will be accepted by every one interested in advanced ideas. No one, I think, will question the fact of the importance of the initial point of the boiler and its furnace, and that, upon its mismanagement, the efforts of refinement are rendered, in many cases, completely void. It would seem so simple that argument would be unnecessary, were it not that, on every hand the matter is entirely ignored, resulting in waste and destruction. We would ask, are not the efforts of the best furnace-designers completely set at naught often by reason of the manner in which they are operated? Is it not a glaring fact that, in all large cities where smoke abatement has been, and is being attempted, the great stumbling-block is the low grade of intelligence and indifference of the operatives.

In looking upon this subject from a mechanical and engineering standpoint, we are fully alive to all the requirements to give

complete combustion and thorough distribution of heat units; proportion of grate area and openings, proper amount of air, conduction of the heated gases, are all carefully considered. When all is completed, we have had the wonderful spectacle of these conditions being turned over to the simple treatment of ram-jam shovelling and slice-bar operations. I claim that the fireman should know, at least, the elements of combustion, the importance of of proper management of fires to produce the greatest results with the least expenditure of fuel. The intelligent engineer keeps this constantly in view as to steam economy; the valves, etc., receive his unremitting attention, unless he should be a mere starter and stopper—for such a so-called engineer can be properly placed upon the same plane as the fireman that shovels without intelligence or judgment.

Now, it may be said that this is being greatly overcome by the application of mechanical stokers, a point that is frequently (and, I believe, without thinking) claimed by those interested in placing stokers. This is a great mistake, well known by those conducting tests, the results always being superior with the greater intelligence of the operator of the machine.

This deplorable and absurd state of affairs is doubly aggravated by, not simply indifference, but actual encouragement, based upon the idea that any one can shovel and throw in; or, perhaps, it is the idea of—they put it in the slot and we do the rest. Does it ever occur to these proprietors, or the superintendents of manufacturing establishments, that, while they are straining at gnats in the refinements of every application in the various departments looking to economic results, right upon the threshold they are swallowing a camel with the greatest ease?

Within the past few years, in every community where cleanliness, taste, and health are considered, there has come forth a crying appeal to the authorities to lessen the great evil of smoke in the atmosphere. In response to this, inventive genius has promptly come forward. The multitude of devices that have been perfected and put in operation furnishes ample testimony of this fact. Many of these, when properly operated, accomplish satisfactory results in smoke abatement, but no inventor has ever had the te-

merity to label his machine or furnace, "No skilled fireman required." Per contra, it is well known that the most intelligent fireman produces the best results; and it is also an undeniable fact that the best devices are set at naught by incompetent operating. The writer has been brought in contact with large fields of boiler practice, and in many cases, aside from other disqualifications, the firemen were unable to speak or understand a word of the English language. It may be said, as I have heard it said, that these men are not paid to think but to do. Well, they do do. They will do up a coal pile, furnace, and boilers, with alarming rapidity. I say alarming to those whose views are broad enough to consider the initial and important points. On the other hand, it is a lamentable fact that there are a great number of men in official positions, as superintendents and proprietors of establishments, who seem to be utterly incapable, or unwilling, to note the importance of the necessity for a higher grade of labor in the firing and management of boilers.

One of the most surprising features in connection with this state of affairs is the tendency of those interested to place boilers, claiming, among their numerous merits, that of less attention required than others, precisely on the old exploded idea applied to engines, "No skilled engineer required." I have now before me a letter from a boiler representative who claims that his boiler will give the utmost satisfaction with one-half the attention that others receive.

What is greatly needed at present is to lay aside the idea that any one is good enough to fire and manage boilers. When you engage a man for your office do you not require that he shall possess some qualifications for the position? And if aptness is shown do you not show appreciation by advancement to a higher plane, the interest being mutual? Why not apply this to the selection of firemen? As it now stands, we cannot but exclaim:

> "Strange, what a difference there should be
> 'Twixt tweedledum and tweedledee!"

There are many plants in operation where, by incompetency in this line, the steam efficiency is greatly lessened, furnaces and

boilers working in neglected conditions, fuel wasted, and the community begrimed with volumes of unnecessary smoke; and, in addition to these evils, that of jeopardizing lives and property. Unless this matter is considered and such action taken as will improve this corps of operatives, it would seem absurd to be continually reaching and extending into the higher refinements of steam-engineering when such simple and important features are ignored at the threshold.

Under these conditions, does not the pertinent question present itself to the employer: Are we not occupying a false position by this seeming indifference? Do we not retard the development of a class of labor which, by a recognition, by an appreciation that some skill and judgment are required, would be animated by the smallest spark of ambition to qualify for advanced positions? Is not this condition of affairs a gross inconsistency,—nay, a mockery,—in the face of the query put by those guilty of this indifference: Why can we not get better men than this? In reply to that, we would state, simply, it is not sought on your part. Just as long as this class of operatives is looked upon as mere shovelers, throwers of coal, and carriers of water, ignorance, with all its attendant waste, destruction of property, and general demoralization, will be prominent in the boiler department.

As a fitting close to this, it would be proper to ask what degree of intelligence or knowledge would qualify one to fire boilers properly?

1. That the fires should be maintained with uniformity, and that no openings, in the form of bare places, showed upon the bars to permit cold air to pass through.

2. The judgment that will enable him, by a glance at the ash-pit, to know at once, to a great extent, the condition of the fires.

3. He should know something of the various fittings of the boilers, such as valves, etc., and the details of the furnaces.

4. But not least, an ambition to grasp the details, so as to qualify him for a still higher plane, which would certainly follow, provided there was judgment enough in the superior to note such details.

Sufficient, we think, has been said to convince the most obtuse

mind that the indiscriminate employment of labor for this purpose is a crying evil, and some consideration given to the claims here made, that, simply because one can shovel and throw, it does not follow that he is qualified to fire and have charge of steam-boilers.

Discussion.

The President: Mr. W. E. Koch, what do you think about the treatment of boilers? We had a boiler discussion once before.

Mr. W. E. Koch: I am afraid I must plead guilty to many of the charges in Mr. Ashworth's paper, but "an honest confession is good for the soul." The first point, as Mr. Ashworth very well knows, is that a great many of us are running with less boiler power than we ought to have. The boilers are forced too much at times. As to boiler firemen, it is hard to get good, intelligent men at the wages paid, and may be we do not pay enough attention to training the men. The introduction of cheap labor has reduced the boiler-men's wages from time to time. Pauper labor is a curse to any country; foreign firemen can be had at far less money than an American fireman will fire a boiler at, and the tendency seems to be in the direction of cheapness. We have got to such a point now that it is very hard to get out of the rut. I have not given so much thought to this question lately, having devoted much time to the improvement of gas producers. What I am trying to do is to make gas firing cheaper than coal-firing; we must ultimately come to burning gas under our boilers, and do away with solid fuel altogether. I think it can be done; I think it is far more economical to make gas in a central position in the mill, and pipe it to the boilers the same as we do natural gas now. I think that is the best solution of the question, and do away with solid fuel altogether, do away with firemen and everything else, and get back to the good old days of natural gas.

The President: What are the railroads going to do while running along at 65 to 75 miles an hour? They cannot carry a gas-well along with them. I think Mr. Ashworth's remarks apply more to the ordinary stationary boilers than to the locomotive. The locomotive fireman is selected more carefully, and he has a future promotion in view. Furthermore, he is constantly

under the eye of the engineer. I think there is less difficulty in this respect upon railroads than in a place where the boiler is located by itself, and where the fireman has nobody to look after him.

(Here a member spoke about the firemen on the passenger engines of the Pennsylvania R. R., and the premium paid for good work, and concluded by saying that Mr. Koch had struck the key-note in the wages; if we pay good wages we will get good men.)

THE PRESIDENT: Mr. Lewis, what do you think of this question?

MR. LEWIS: Mr. President, there are just two things suggested to my mind by this discussion: When the manager or treasurer comes back to the superintendent with the question of big wages of the firemen, the superintendent might (especially where coal is more expensive than in Pittsburg) point to coal economy; and where coal is worth more money than it is here, there would be a greater object in having skilled firemen. This is certainly an object, and will furnish the superintendent with a counter-argument. And another thing, it strikes me that if Mr. Koch does away with his solid fuel under the boilers, and uses a gas-producer, he will bring about an absolute necessity for careful firing there.

MR. BRASHEAR: I had the pleasure of a visit from Sol Smith Russell, who tells a story about Booth, who complained about one of his actors not coming up to time in a part he had. Said Booth, "Why, do it this way (he showed him how) and this way; let your gestures be natural." Said the player, "Mr. Booth, if I could act like that, I would not be here for twelve dollars a week." As soon as a fireman gets a better job, he is going to go. Regarding the use of natural gas, the problem troubled me a great deal, and I kept putting in different kinds of burners as the gas got scarcer, and I have now got a burner for an upright boiler which I would be pleased to have the members see, and which I think economizes greatly. I cannot keep the steam down now where I could not keep it up before.

THE PRESIDENT: If this subject is exhausted, I think it would, perhaps, be well to refer to the paper which Mr. Estrada read in June, on which the discussion was supposed to have been

closed. Since that time a communication has been received from Prof. J. B. Johnson, of the Washington University, in St. Louis, requesting that room be given to a few remarks that he has reduced to writing, and which we might read and further continue the discussion if Mr. Estrada wishes to reply to it, or any member of the society; or, if it should become too late, we could defer it until another time.

Moved and seconded that Prof. Johnson's paper be read. Carried.

Discussion of Mr. Estrada's Paper Continued.

Prof. J. B. Johnson, Washington University St. Louis (communicated): I have read the paper on "The Effects of Suddenly Applied Loads on Iron and Steel," by Mr. E. D. Estrada, in the June, 1893, proceedings of your Society, and also the discussion on the same in both the June and September proceedings, and should like the privilege of adding some further discussion for your next publication.

The particular conclusion, both of the writer of the paper, and of others, which I think is entirely unwarranted by the observations, and also quite contrary to all the observed facts, is that the elastic limit is much lower under impact loads than under static loads. The writer of the paper quotes from an editorial in the *Engineering Record* for September 9th, which to my mind stated the problem correctly, but which he (the author of the paper) failed to see the force of. Since this paper, with its discussion is liable to unsettle some people, causing them to lose confidence in the "text-books," and in static tests of materials as adequate to determine resistance to shock, it seems to me very desirable that the conclusions should be altogether sound and unimpeachable.

Any person putting forth a claim of a new discovery in the laws governing the strength or behavior of engineering materials should be absolutely sure of his ground before announcing that the generally accepted theories are incorrect. For it must be remembered that the "text-books" do not give the individual views of the authors but the accumulated knowledge of the world.

Now, as to the particular *new discovery* in question. Mr. Estrada

claims (p. 21, June Proceedings) that "the most important of all the features brought out by these experiments undoubtedly is that the elastic limit is a variable quantity depending upon the conditions under which the loads are applied." "That an examination of the results shows that in many cases a drop of two feet was sufficient to obtain a permanent set, and, it is likely, that with more accurate means to measure the effect, a drop of one foot, and even less, would have been sufficient to have reached the elastic limit." The weight of the hammer was 100 pounds. Without analyzing the problem at all, or explaining his processes, the author of the paper "concludes," from this evidence, that the elastic limit of the material is reduced to almost zero. This conclusion is reinforced by Thomas H. Johnson, also, in his discussion (p. 43, June), where, after reviewing the facts, he says: "We have, therefore, in one case, an elastic limit of one-half to two-thirds the ultimate strength, and in the other case this limit dropping to about zero. The material is the same in both cases. The difference is wholly in the mode of applying the load. We can, therefore, no longer regard the elastic limit as a property of the material, but as a function of the conditions of the test. This is directly at variance with accepted principles, and will require whole chapters of our text-books to be rewritten." Both of these gentlemen then proceed to explain this new discovery on the principle of the conservation of energy. Their conclusions are further reinforced in the discussion in the September publication.

To a superficial reader the charge that our accepted theories are wrong has been firmly established. In fact, they have not been in the smallest degree affected by these tests. The energy, or *vis viva*, of a weight of 100 pounds falling one foot is 1200 inch pounds. Now, the ultimate resistance to stretching of a $\frac{5}{8}$-inch-round rod at its elastic limit is shown by the static strain diagrams themselves to be about 10,000 to 11,000 pounds. The total distortion of an 8-inch iron or steel rod at its elastic limit of say 36,000 pounds per square inch is $\frac{36,000}{28,000,000}$ of its length, or say one one-hundredth of an inch. The total work of resistance which this rod could offer to a shock, in tension, at its elastic limit, would be $\frac{1}{2}$ (11,000 × 0.01) = 55 inch-pounds.

If all the energy of the falling weight of 100 *pounds were to be absorbed by the specimen, a drop of fifty-five one-hundredths of one inch would develop in the bar a stress of* 11,000 *pounds, and, therefore, bring it to its elastic limit.* A drop of one inch would give it a permanent set, and a drop of one or two feet would give it a large permanent set. The reason why the first drop of two feet did not always give to these specimens a large permanent set was because there was so much resilience, or spring, in the parts intervening between the hammer and the specimen, and between the specimen and the ground. Here were the deflections of three cross-heads, the distortion of two rods, and the elastic cushion of the machine itself, which rested on a timber base, and we know not how much more elastic matter below the timber, all of which were helping out the test specimen to absorb the energy of the blow. How much the specimen really had to take no man can tell, but evidently a very small portion, since a drop of two feet (2400 inch-pounds) never seemed to produce an appreciable permanent set, whereas the most the specimen could absorb, without permanent set, was but 55 inch-pounds. It is patent, therefore, that the author of this paper has entirely overlooked the real elastic resilience of the bar itself, and has jumped to the conclusion that because it was smaller than he supposed the elastic limit must be very low. In other words, if he had analyzed the problem, as all the "text-books" indicate, he would have seen at once that

1st. The energy of his 100-pound weight was mostly absorbed by something else than the specimen itself, and that the portion taken by the specimen was entirely unknown.

2d. That this is an imherent weakness of all impact tests.

3d. That the elastic portion of the total resilience of every blow is not permanently lost by the specimen, but may be used over and over an infinite number of times, and hence it is included in the "total foot-pounds of energy resisted" as many times over as there were blows, and that, therefore, this total is misleading.

4th. That the total energy that any kind of engineering material can absorb without taking a permanent set is very small indeed.

5th. That not knowing what portion of the total energy of any blow is taken by the specimen itself, and what portion is taken by the accompanying parts, including the foundation, we could never compute from an impact test the stress per square inch produced in the specimen, even when this was known to be within the elastic limit.

6th. That the only surprising thing about these particular tests was that the first blow (of two feet fall) should produce so small a permanent set in the length of the specimen, since to produce no appreciable set implied that 95 per cent. of this energy had been absorbed by the accompanying parts and only 5 per cent. by the specimen itself, even for a 36,000 pounds per square inch fibre stress.

As to the other "discovery" of the paper—that impact tests or instantaneous loading gave greater elongations—this was fully established by Col. Maitland in a paper before the Institute of Civil Engineers (March, 1887), on "The Treatment of Gun Steel." An apparatus similar to Mr. Estrada's was used, and also gunpowder explosions between two cylinder heads joined together by rods, and the elongation was raised from 27 per cent. for the static tests to 47 per cent. for the blows and to 60 per cent. for the explosions. (See *Proc. Inst. Civ. Eng.*, vol. lxxxix., p. 120.) This action of suddenly-applied loads is also given by Prof. Unwin, in his "Testing of Materials of Construction" (1888), on p. 89. In no other place have I found any statement at all as to the effects of instantaneous loads.

As between quick and slow static tests, Prof. Bauschinger has shown conclusively that between any reasonable limits, as from 1 minute to 1 hour, there is little or no difference in the results, possibly a somewhat smaller elongation and greater strength on the longer test, but the differences are not appreciable. (See Bauschinger's "Annual Report of Tests," 1891, p. 13.) Since a large part of the elongation of a short specimen in a static test results from the stretch of the necked-down portion, and since this is a species of flow requiring time for its operation, an instantaneous pulling out of a bar stretches all parts to this same ultimate distortion, the time-resistance being so much greater than

the effect of any local weakness. There is little doubt that the actual stress developed in the bar, when stretched suddenly, is much greater than it could possibly exert under a static load.

MR. E. D. ESTRADA: After having read Prof. Johnson's discussion of my paper which was read before the society at the June meeting, I wrote to the professor as follows:

PITTSBURG, PA., NOVEMBER 11TH, 1893.

PROF. J. B. JOHNSON,
WASHINGTON UNIVERSITY,
ST. LOUIS, MO.

Dear Sir: I am informed that you are the author of a text-book on "The Resistance of Materials of Engineering Construction," which is now either in the printer's hands or has been published recently. I shall be very glad and feel obliged to you if you will favor me with the title of the book and the name of the publisher, that I may get a copy.

I have read your discussion of my paper, "The Effects of Impact, etc.," communicated to the Engineers' Society of Western Pennsylvania, and should be very glad to read your definition for the "elastic limit" and "yield point."

Trusting that you will kindly favor me with the information desired, I remain

Respectfully yours,
E. D. ESTRADA.

To which I received the following reply:

ST. LOUIS, MO., NOVEMBER 13TH, 1893.

MR. E. D. ESTRADA,
PITTSBURG, PA.

Dear Sir: In reply to your inquiry of the 11th inst., I may say that you probably refer to "Theory and Practice of Modern Framed Structures," by myself and Messrs. Bryan & Turneaure, Wiley & Sons, 1893—$10—which came out in September last. You would not find in that work, however, any new definition of elastic limit. I use the term as every one else does. It seems to me that you have been misled by your strain diagram of impact tests. Apparently, it starts right off from the zero point; in fact, if all your impact energy had gone into the specimen, *as you have assumed it to do*, the *impact elastic limit* on your diagram would be at about 25 *or* 30 *inch-pounds*, which would be so near the origin on your scale that the curve would appear to start from that point. *And yet* the elastic limit might be some 40,000 pounds per square inch. You seem to have entirely overlooked the fact that the elastic resilience, or capacity for absorbing energy without taking a set, is for your bar or specimen almost *nil*, and I would suggest that if you come to see it in this light, that you will frankly confess that this point has been overlooked, and that, in fact, your experiments have no significance whatever as to the elastic limit under impact, since you

1st. Did not, or *could not*, know how much of the total energy of the blow was taken up by the specimen, and

2d. You did not carefully determine the particular load which first produced permanent set.

The first of these objections will *always* make it *impossible* to determine elastic limit stress under impact.

If you insist on maintaining your position, it will only prolong the agony.

Yours truly,
J. B. JOHNSON.

Postscript.—I have no desire to embarrass you in your professional relations, but your paper was calculated to do a great deal of harm to the cause of a true understanding of the properties of engineering materials, and as it had passed two of your meetings, and had been twice published without challenges from any one in your own Society, I felt it my duty to point out the heresy, and to do it it in the same publication where the original appeared.

You, of course, challenge criticism when you openly deny the accepted theories, and charge all previous investigators with error, and must, therefore, accept the consequences of such boldness if it should turn out that you are the mistaken party. J. B. J.

In the foregoing letter, Professor Johnson fails to define the elastic limit, and simply says that he "uses the term as every one else does." Let us see how many terms are used for the subject under discussion. We may put Professor Johnson down with three: "Impact elastic limit," "elastic limit," and "capacity for absorbing energy without taking a set;" others call it "yield-point," "elastic constant," a "certain limit of stress," "stress-strain ratio," "stress-producing set," "the point at which permanent set takes place in materials," etc. Could it be possible that all these names are for different constants?

Professor Johnson has referred me to Unwin on *Testing of Materials of Construction.* I refer the Professor to the same book, page 6, where the author says: "It has long been known that the elastic limit of a bar is not a fixed limit; by loading and straining a bar in one direction the elastic limit for that kind of stress is raised. More recently it has been shown that if the bar is loaded and strained in different directions the elastic limit may be lowered. One of the most ordinary conditions of a structure or a machine is that it is subjected to reiterated working stresses, all lying between a minimum and maximum value, or between a

maximum stress of one kind and a maximum of the other kind. In such conditions, new elastic limits are produced differing from the original or primitive elastic limits. The determination of what those limits are in given circumstances is the object of remarkable and difficult researches, which are beyond the range of ordinary testing."

Also, on page 8, "The greater the range through which the stress varies, and the greater the number of repetitions, the lower is the breaking stress. These results are explainable if it is supposed that, *instead of fixed limits of elasticity, these limits depend on the range and kind of variation of stress*, and that, if the range of perfect elasticity possible in given conditions is exceeded, deformations are produced, which, accumulating with successive repetitions of load, finally lead to fracture. General experience accords with this conclusion."

Again, page 246, "For many materials the elastic constants change with the amount of stress applied and with every repetition of stress, and to add to the confusion, *there is no complete agreement as to the definition of the constants or the methods of determining them.*"

This may account for the fact that Professor Johnson did not attempt to define the elastic limit, and yet he insists that it is a fixed property of the material.

My paper "is liable to unsettle some people, making them lose confidence in text-books." That has already happened. How can we retain that confidence when authors differ as to what is the elastic limit, and when one author builds up an elaborate theory of resilience on the supposition that the elastic limit is a fixed property of the material, and another says the elastic constants are variable.

I do not wish to be understood as making light of the text-books. It is far from my intention to do so, for I have the highest respect for their authors. But because a theory has been incorporated in a text-book it does not follow that the theory is unimpeachable; nor can a whole series of experiments be discredited by quoting a theory which is unverified by experiment. I have searched every text-book within my reach for a formula for the

behavior of materials under impact that would give results approximating to these experiments, but have not found any that is in the least degree comparable. I find, on the contrary, that the whole subject of resistance to shock, as treated in the text-books, is made up of theoretical suppositions and deductions without a single experimental fact to verify those deductions.

When Professor Johnson says that "conclusions should be altogether sound and unimpeachable," I agree with him in the abstract, but not as to the application. It should apply with redoubled force to the theories propagated in the text-books, not to the individual who is unable to reconcile those theories with observed facts. When an individual finds a series of facts which do not agree with the published theory, should he conceal the facts and turn his back upon them for fear he might draw an erroneous conclusion? Suppose he were bold enough to draw a conclusion, how could he know whether he were right or not? The only way to find out is to make known the facts and conclusions and invite discussion. But when those conclusions challenge the correctness of a theory, it will not do to quote that theory, nor its deductions, in proof that the conclusions and the facts are all wrong. If the facts are wrong, let it be so shown by repeating the experiments with all possible precautions against error. If the facts are right and the conclusions wrong, let it be shown where the reasoning is astray, and how the facts and the theory can be reconciled.

The possible effect of such discussion on the mind of the superficial reader is not to be considered; and the careful reader will always be able to distinguish between a fact and an individual conclusion.

Text-books represent "the accumulated knowledge of the world," and most of them have copied Kirkaldy's conclusions, giving them as established facts. Are these conclusions unimpeachable?

The accumulated knowledge of the world is principally cast-iron knowledge, which may explain why the world knows so little about steel.

I did not analyze the problem nor explain my mental process. My analysis may have been deficient; it was all I could

do. The kind of mental process would not add to nor detract from the result, no matter whether it be a fact or a fallacy, and while it might have amused the professor, it would not have helped him at all.

I proceeded to explain the new discovery on the principle of the conservation of energy; with what success or failure the professor does not mention, but he thinks the accepted theories have not been affected by these tests. Possibly they will stand, like the old bridge, "out of respect to the memory of the engineer who designed it, and from force of habit."

That a drop of 2 feet did not always produce a permanent set is accounted for by the professor on the grounds that there was so much resilience, or elastic spring, in the intervening parts, etc. The top plate, which is struck by the hammer, is a rolled steel bar 8 inches by 2 inches by 12 inches long. This plate is supported by the four bolts, $1\frac{7}{16}$ inches diameter, which pass through the middle plate without having any connection with it and support the lower plate which connects the specimen with the middle plate. The lower plate is similar to the upper plate. The middle plate rests upon the two 15-inch by 80-pound I-beams, and to which it is bolted with eight $\frac{7}{8}$-inch iron bolts. The beams were 18 inches long, and supported over their whole length on 8-inch by 12-inch oak timbers, framed to two other timbers. The beams were spiked to the timbers on both sides of the flanges and at the ends. The timbers rested on the surface of the ground. During the winter, when most of the experiments were made, the timbers were entirely covered with a solid mass of ice. When the apparatus was taken apart, it was necessary to use a crowbar in removing the timbers. In short, the beams were frozen to the timbers, and the timbers were frozen to the ground. How much "elastic cushion and spring" there was in connection with the apparatus, every one may determine for himself. I have here this evening the chucks used, which are the smallest part of the apparatus next to the specimen, and from their present appearance you may judge how much of the energy of the blows they absorbed.

Had I analyzed the problem "as all the text-books indicate,"

I would have seen my errors, says Prof. Johnson. In this particular instance he is correct, for to indicate the problem is about all they do on the subject.

Here is an example of how the problem is "indicated" in one of the text-books: "If one end of a bar, placed in a vertical position, is fixed, while a falling body whose weight is w acts upon the other end, the height of fall may be sufficient to produce rupture. Let h be the height of fall required and p the ultimate resistance of the material of the bar. In order that rupture may take place:

$$h = x_1 \times \frac{A}{2w} \times \frac{p^2}{E}."$$

(A being the area of normal cross-section, E the coefficient of elasticity, and x_1 the length of the bar.) The author then says: "This equation shows *that the height of the fall varies directly as the length of the piece.*"

"It is virtually assumed, however, that the extension or compression is uniform throughout the length of the bar to the instant of rupture. This, in reality, is not true, and h will not vary as rapidly as x_1. The principle established in this equation is equally true for torsion and bending."

This principle is established on an assumption, and, further, upon something which the author himself says is not true. As will be found on substituting the values in our case,

$$h = x_1 \frac{A}{2w} \cdot \frac{p^2}{E} = 8 \times \frac{.3068}{2 \times 100} \times \frac{(50{,}000)^2}{28{,}000{,}000} = 1.096 \text{ in.}$$

According to this, the test-piece should have broken with a drop of 1.096 inches.

According to Prof. Johnson, "a drop of 1 inch would give it a permanent set, and a drop of 1 or 2 feet would give it a large permanent set." But how can a drop of 1 or 2 feet give it a large permanent set, if a drop of 1 inch will break it?

By the same law, the four bolts which first receive and transmit the blow, with their length of 14 inches and aggregate area of 6

square inches, would have an ultimate resistance to shock of 3750 inch-pounds. That is to say, if the doctrine of the text-books is correct, the whole apparatus should have gone to smash with a single drop of only $37\frac{1}{2}$ inches.

But the bolts did not break with a drop of 25 feet (eight times their alleged ultimate strength), and withstood, without breaking, more than 300 blows, aggregating over 4000 feet of drop (400,000 foot-pounds). How could these parts absorb, conceal, or otherwise make away with more than 1200 times the energy required to break them?

Besides, why should absorption of energy be observed in the case of my apparatus, and not in the case of those where the "elastic constants" are determined? In static tests, also, the attachments and different parts of the machine must sustain their share of the force, which must be relatively as great in the one case as in the other. Surely, this 95 per cent. of the energy of the "drop" must be accounted for in some way. It cannot be accounted for by saying that it is absorbed, and yet the parts which absorbed it remain unchanged. If, owing to their elastic resilience, it was used in springing the different parts, did the parts remain sprung after the hammer came to rest, or did they recover their original form and allow the energy to pass into weaker parts, or did it run into the earth? I regret that Prof. Johnson did not dwell more on this subject.

I do not understand what Prof. Johnson means by "work of resistance." If by this he means the "elastic resilience," or "capacity for absorbing energy without taking a set," the value should be "almost nil," and not 55 inch-pounds. If the Professor means the work done in overcoming the resistance of the bar through a distance of .01 of an inch, then that is not equal to one-half of it, but the whole of it. The formula of the text-books assumes that the load is gradually applied, starting from 0, and that the *mean* load only should be used. But each successive increment of load produces its corresponding increment of stretch, and it requires the whole load to produce the whole stretch. The stretch will be the same if the whole load is applied in one lump, and not by successive increments. The half load can only produce one-half

the stretch, and the work of the whole load cannot be measured by the half of it. It is unfortunate that the Professor, in seeking to defend the "cause of a true understanding of the properties of engineering materials," should have hit upon a formula of the text-books that is itself a blunder.

The analysis of the action of suddenly-applied loads to which the Professor refers me, *Unwin*, 1888, p. 89, is simply a copy of Col. Maitland's results, to which the Professor had already referred.

The apparatus used by Col. Maitland, and which Prof. Johnson says was similar to mine, consisted of "a test-specimen screwed into two blocks, one above and one below, so that, on falling a certain distance, the top block was arrested and the weight of the lower one subjected the specimen to sudden tensile strain." The reduced length of the specimen was 2 inches.

"The elastic limit may be some 40,000 pounds per square inch, yet the resilience or capacity for absorbing energy without taking a set is, for one of the $\frac{5}{8}$ rounds, almost nil." Is this difference in obtaining the same result (a permanent set) a property of the material? Prof. Johnson must admit that there is some difference between "almost nil" and 40,000 pounds per square inch.

I have defined the elastic limit to be the point at which energy begins to be converted into heat, and I conclude from the experiments that this point varies with different modes of applying the load. Prof. Johnson has not shown my error, and I still hold to that conclusion, even at the risk of "prolonging the agony."

Mr. Thomas H. Johnson: Prof. Johnson has been pleased to mention my name in his discussion of Mr. Estrada's paper, and I will venture to reply to his criticisms, confining myself to the general conclusions and the evidence on which they rest.

The Professor deprecates any reflection upon the accuracy of the text-books; "for," he says, "it must be remembered that the text-books do not give the individual views of the authors, but the accumulated knowledge of the world."

Text-books do, or ought to, contain "the accumulated knowledge of the world;" but they do not stop at that. They contain,

besides, much that is speculative theory; and, while giving full meed of praise and veneration to the brilliant minds who have advanced our knowledge to its present status, we should exercise due discernment as between knowledge and theory, and not permit that veneration to blind us to possible errors, lest belief in the infallibility of the books become a bar to further progress.

These text-books are not the work of divine inspiration. Their authors are not gods, but men, such as we ourselves, possessing the same powers and subject to the same limitations.

The Catholic Church may proclaim the "infallibility of the Pope," and Presbyterians announce the "inerrancy of the Holy Scriptures," but we are not yet ready to set up similar claims even for our most eminent writers and their works, not to speak of the more numerous class of lesser lights.

In regard to the behavior of materials under static tension-stress, we know from observation certain facts, among which may be mentioned:

1. That, up to a certain limit of load, the material stretches by an amount proportional to the applied force and the length of the piece strained.

2. That, within the same limit, when released from stress, the material returns to its normal length.

3. That, when strained beyond said limit, the amount of stretch ceases to be proportional to the load, but becomes variable and irregular.

4. That, when released from stress above said limit, the material does not return to its original length, but retains a portion of the stretch as a permanent elongation.

5. That the amount of this permanent elongation is also variable and irregular.

6. That when the applied loads are still further increased, the material is ruptured.

7. That for each material (tested under similar static conditions), the aforesaid limit, which we call the "limit of elasticity," bears a fairly constant ratio to the ultimate strength.

All these points are the result of direct observation of facts, and, as such, may properly be classed as part of "the world's accumu-

lated knowledge." Starting with this knowledge, our text-books have evolved certain theories as to "resilience" and "dynamic resistance" which occupy whole chapters of those books. A fundamental feature of those theories is the assumption that the elastic limit is a physical property of the material, independent of the mode of applying the stress. If, therefore, it is made to appear that the elastic limit is not an independent physical property, but is dependent on the conditions under which the load is applied, it follows that all those chapters treating of resilience and dynamic resistance are founded on an erroneous assumption, and must be rewritten.

In addition to what we know there are some things we do not know. For instance:

We do not know how the stress is distributed among the different fibres in the specimen.

We do not know why the stretch and accompanying reduction of section are greatest at the middle of the length instead of being uniform throughout.

We do not know how, or in what way, the applied force acts upon the individual molecules to produce change of form in solids. We look wise and talk learnedly about the "flow of solids," but what do we know about it?

We do not know the static equivalent of a dynamic force; nor the dynamic equivalent of a static force; nor indeed whether such an equivalent exists at all. We are taught in one part of the book that a static load, suddenly applied, will produce twice the effect of the same load gradually applied; but we are left in the dark as to whether the doubled load is to be rated as static pounds, or dynamic foot-pounds, or inch-pounds.

Prof. Johnson computes the dynamic resistance at the elastic limit of a standard test piece, such as Mr. Estrada used, to be 55 inch-pounds; the corresponding static resistance being 11,000 pounds. This would make 1 inch-pound of dynamic force equal 200 pounds of static force. From the summary of results on p. 33 (Mr. Estrada's paper) it would appear that at the point of rupture, the static and dynamic force of Group C. (the one shown graphically in Plate 3) are in the ratio of 36,165 dynamic foot-

pounds to 51,516 static pounds; or 1 foot-pound = 1.42 pounds static; or 1 inch-pound = 0.12 pound static. From which it would seem that the dynamic force is relatively 1600 times as effective at the elastic limit as at the point of rupture.

If it is true that the elastic limit is a fixed property of the material, then the relation existing between the elastic limit and the ultimate strength, as found in static tests, should also be found in the dynamic tests.

In static tests the elastic limit is usually found at between one-half and two-thirds of the ultimate strength. For Mr. Estrada's Group C it is 67 per cent. If then the dynamic elastic limit is at 55 inch-pounds as per text-books, then rupture should occur at $82\frac{1}{2}$ inch-pounds, or 100 pounds dropped $\frac{5}{6}$ of 1 inch. Instead of this we find it requires 11,000 foot-pounds or 132,000 inch-pounds to break each specimen, or 1600 times the theoretical strength.

Reversing the process, with rupture at 11,000 foot-pounds we should find the elastic limit at $11{,}000 \times 0{\cdot}67 = 7370$ foot-pounds, instead of which Mr. Estrada's Plate 3 would indicate about 500 foot-pounds or $4\frac{1}{2}$ per cent. of the ultimate, and 110 times as high as the theoretical position.

Placing these figures in juxtaposition, for better comparison of the relations between the elastic limit and the point of rupture, we find, experimentally:

By Static test, . . . Elastic limit = 67 per cent. of rupture.
By Dynamic test, . . Elastic limit = $4\frac{1}{2}$ per cent. of rupture.

The relation between the theory of resilience and the dynamic experiments stands thus (foot-pounds being converted into inch-pounds):

	Elastic limit. Inch-pounds.	Rupture. Inch-pounds.
By theory, ...	55	$82\frac{1}{2}$
By experiment, ...	6000	132,000
Ratio, theory to experiment, ...	$\frac{1}{110}$	$\frac{1}{1600}$
Ratio, theory to experiment in per cent., . .	$\frac{9}{10}$ of 1	$\frac{1}{16}$ of 1

Prof. Johnson accounts for these wonderful discrepancies by supposing that the difference is due to the energy lost by the resilience of the test-piece, its attachments, the frame of the machine and its foundations. The force of the blow was transmitted to the test-piece through two plates and four bolts, intervening between the hammer and the test-piece. Some small part of the energy was undoubtedly lost in transmission through these intervening parts; but no part of the shock could reach the frame or its foundations, except by transmission through the test-piece itself. Hence the loss by the plates and bolts only need be considered, and it cannot be a large amount. Similar loss occurs also in static tests, and we have no reason to believe that it is any greater proportion of the whole force in the one case than in the other.

I will not try to follow up this loss and determine its amount. It is sufficient to remind you that Prof. Johnson's summary mode of disposing of these experiments, requires us to believe that at the elastic limit, out of every 110 foot-pounds developed, 109 foot-pounds were lost, and only 1 foot-pound utilized; and that, at rupture, 1599 foot-pounds were wasted for each 1 foot-pound utilized. This supposition is so preposterous and absurd that it needs no further answer. That one of Prof. Johnson's intelligence and acumen, should rest his case on this absurdity, can only be explained by supposing that, in his zeal for the text-books, he overlooked the real nature of the facts presented.

We must therefore maintain that the experiments as published are substantially correct; and that any loss which may have occurred in the manner claimed, while affecting the numerical values in a minute degree, does not affect the relative values at all. In view of all the evidence we cannot avoid the conclusion that the relation between the elastic limit and the ultimate strength, in the drop test, is radically different from that relation in the screw test; and that the elastic limit cannot be a fixed property of the material; but must be regarded as a result of the conditions under which the load is applied.

In the original paper and its discussion it was suggested that these changes are susceptible of explanation on the principle of the "conservation of energy."

Every inspector who is engaged in frequent tests of iron and steel, is familiar, in a general way, with the fact that no perceptible heat is developed in the test-piece until after the elastic limit is passed, and that thence to the point of rupture the sensible heat rapidly increases. I am not aware of any recorded observations that would establish a direct relation between the amount of heat developed and the amount of permanent stretch. To do so, would require thermal instruments of very great delicacy. But, the fact must be recognized, that *the development of heat and of permanent stretch are concurrent phemomena.*

The principle of the conservation of energy furnishes a complete and satisfactory explanation, and should have led us, *a priori*, to the conclusion that any change of condition, which changes the point at which energy begins to be converted into heat, must also change the elastic limit.

If no part of the energy is converted into heat, the test-piece will return to its original dimensions. If any part of the energy is lost by conversion, the piece will not return to its original dimensions by so much as the energy has been diminished. This is "*theory*," not "*knowledge*," but the reasoning is logical, and it affords a consistent explanation of the observed facts.

Returning, now, to the dynamic resistance at the elastic limit, which Professor Johnson computes at 55 inch-pounds for a $\frac{5}{8}$-inch test-piece, 8 inches long. This result, as arrived at by the Professor, is strictly in accordance with the books; but, as already shown, it differs from the experimental facts by more than 99 per cent. Either the theory or the experiments must, therefore, be very greatly in error. Professor Johnson has not disproved the experiments. Let us see if the theory will stand investigation.

We know that the accumulated energy of a falling body is the product of its weight by the height through which it falls. We know that the capacity for work, of a given volume of water, is found by multiplying its weight by the head under which it acts. And we know, generally, that the dynamic energy of a moving body is the product of its weight by the height of fall necessary to generate its velocity. Hence, we conclude that the measure of

work *must* be the product of *a force* by *a distance*. When we come to estimate the work of a static force, we seek to apply this principle. But, static forces are at rest, and not in motion; and, for want of a better distance, we measure the result of that work in the deformation of the test-piece, and call *that* the distance through which the force acts.

But is that right?

Mr. Estrada lets his 100-pound weight drop from a height of 10 feet, and we say he develops 1000 foot-pounds of energy. As a result of that energy his test-piece is stretched a certain per cent. of its length. Would you again multiply that 1000 foot-pounds by the elongation to arrive at the work done? If you multiply foot-pounds by inches, by what name will you call the product? If the stretch is not a factor in dynamic energy, why should it be in statics? Are we not confounding cause and effect?

The miller discharges water over his wheel and develops a certain amount of energy. The expenditure of that energy results in grinding the grist in his hopper. Would you estimate the work done by multiplying the wheat in the hopper by the height of the dam?

The stretch of a test-piece is an *effect* and not a *factor* in the operating cause, and may not be so used in determining either static or dynamic work.

During my student days, it was my good fortune to fall under the tuition of a professor of mathematics whose mental grasp of the subjects treated was higher and broader than the text-books which he placed in our hands. On not a few occasions, he pointed out to us that a definition, axiom or precept of the text-book, then before us, was derived from the study of a special case, and was not true as a general proposition. He impressed upon us the necessity of being on our guard against that class of error.

It seems to me that the rule now under discussion is a case in point. The principle that work must be measured by the product of a force and a distance is a deduction from the study of the *force of moving bodies*, and cannot be applied to static forces, where *motion becomes rest* and *distance is eliminated*. Where distance and force unite to develop energy, or work, the distance must be so

related to the force as to augment its effect. The stretch of a test-piece is not so related to the force which produced it. In the drop-test, the height through which the weight falls is one thing, the length through which the test-piece is stretched is another and different thing. The one augments the blow, and is an essential factor of the energy produced. The other, is a result due to the physical property of the material. The one is a cause, the other an effect.

So, also, in the static test. The applied force is a cause; the stretch of the specimen is an effect of that cause. We cannot multiply cause and effect and call the product work.

The idea that the energy of a moving body is the product of its weight by the length of its path, or distance travelled, seems to have been due to careless confusion of words. The expression for dynamic energy is not *wd*, but *wh*; and *h* does not mean *distance*, but *height*, and only that particular height which is a function of the *velocity*.

When a locomotive collides with an obstruction, the dynamic energy expended is not affected by the distance the engine may have travelled. It can strike no harder blow when 100 miles from home than when 2 miles. To determine the energy of such a blow we must ascertain the height from which a falling body would have acquired the velocity of the locomotive, and that is the *h* to be used in the equation. The condition which creates energy is not *distance*, but *velocity*, and *height* is only admissible as an equivalent for, and representative of, *velocity*. The carelessness which substitutes *distance* for *height* is responsible for the erroneous formula which misleads Professor Johnson, and blinds him as to the meaning of these experiments.

This dynamic theory applied to static conditions leads to some very curious results.

Under a static load of 11,000 pounds an iron or steel test-piece $\frac{5}{8}$-inch diameter, and 8 inches long, will stretch $\frac{1}{100}$ inches as shown by Professor Johnson, and which we do not dispute. The measure of the work done, according to the formula of the text-books, is $\frac{11,000}{2} \times \frac{1}{100} = 55$ inch-pounds.

(Why the 11,000, should be divided by 2 opens up another point for discussion as to the "inerrancy" of the text-books, but we will let it pass).

If the test-piece had been 16 inches long, the elongation would have been $\frac{2}{100}$ inch and the work done would be just twice as great as with the 8-inch length. If the piece had been 24 inches long, the stretch, and also the work, would have been three times as great, and so on *ad infinitum.*

If the material had been brass or copper, the stretch, and consequently the work, would have been nearly twice as great as for iron of the same dimensions; and in that case also, the stretch and work would increase with increased length of specimen.

What has become of the principle that a specific amount of power can only perform a specific amount of work? The foregoing results are strictly in accord with the text-books; and yet they indicate that the work done by a given force may be multiplied indefinitely, simply by giving it more material to work on.

Here is an important discovery. The miller when the water in his flume is low, can double its power by putting two bushels of wheat into his hopper instead of one. When an iron-master finds his engine inadequate, he can increase its power by giving it more machines to drive. This is indeed, a wonderful discovery; and it may not be denied, because it is the teaching of the text-books.

But let us consider the facts presented when a bar of iron, or other material, is subjected to a static load of tension.

1. The bar is subjected to a certain stress equal to the load, and independent of the dimensions and material of the bar. A load of 1000 pounds will produce a stress of 1000 pounds, whether the bar be 1 inch or 100 feet long; and also the same in iron, steel, brass, or any other material which can sustain that load without breaking.

2. The bar undergoes a change of form; its length being increased, and diameter reduced. These changes will vary with the material, and with the length of the bar.

If we are to hold fast to the idea that a specific force can only perform a specific amount of work, then in seeking a measure of that

work, we must reject all results which vary with the material and the length, and confine ourselves to something which is proportional to the force; and which varies only when the force varies. This compels the conclusion that *the only measure of the work of a static force, is the stress produced.*

The dynamic energy of a falling body is expressed by the equation $x = wh$.

When $h = o$, w is at rest, and we have static conditions. But when $h = o$ the whole equation becomes o and ceases to exist. Hence, when we pass from dynamic to static conditions, we leave the dynamic law behind us, and pass beyond the limit of its application.

The whole subject of "resilience" and "resistance to shock" as derived from static tests, seems to be founded in carelessness and misconception, supplemented by lack of discernment as to the limits of application of a theory.

This instance of "errancy" had not before occurred to me, and thanks are due to Professor Johnson for having called attention to it. It is one more evidence that text-books *do* err, and that some of "the world's accumulated knowledge" narrowly escapes being stupid blunder. A theory founded in misconception and error, and whose results are at variance with observed facts, by more than 99 per cent., is certainly not entitled to such consideration as would warrant us in keeping silent, out of respect for the text-books, nor for fear of "unsettling some people, causing them to lose confidence in the text-books." The sooner we arrive at a realizing sense of such palpable errors, the sooner they will be eliminated, and the text-books be worthy of confidence.

While yielding to none in admiration and veneration for such men as Rankine and Weisbach, and in high regard and esteem for many others, both dead and living, who are recognized authorities among us, I must insist that "to err is human." Authors follow in each other's footsteps. An error or a misconception by one, is taken up and perpetuated by others. That class of error which grows out of the study of a special case is of more frequent occurrence in our books than most of us are aware. It behooves us to be ever alert and on our guard, lest these errors lead us into

trouble. But most of all we should avoid the condition of passive acceptance of all that comes to us in book form, even though endorsed by a loved and honored name. Such a spirit hinders growth and checks development; and is more to be deplored than hasty and ill-considered questioning of accepted theories. The mere suspicion of error should be made known, and receive full and fair discussion, to the end that, if the error exists, it may be corrected; and if it does not exist the doubt may be set at rest.

Adjourned.

R. N. CLARK,
Secretary.

NOVEMBER 28TH, 1893.

MEETING OF THE CHEMICAL SECTION.

The Chemical Section held a conversazione in the library of the Society, on Tuesday, November 28th. Several methods of chemical analyses were discussed.

DECEMBER 19TH, 1893.

THE regular meeting of the Society was held on December 19th, 8 P.M.

Mr. M. J. Becker, president, in the chair; 36 members were present; the minutes of the last meeting were read and approved.

The report of the committee to nominate officers was then read, approved, and the committee discharged with a vote of thanks.

REPORT OF THE COMMITTEE TO NOMINATE OFFICERS FOR THE ENSUING YEAR.

PITTSBURG, DECEMBER 18TH, 1893.

ENGINEERS' SOCIETY OF WESTERN PENNSYLVANIA:

Gentlemen: Your committee appointed to nominate officers for the ensuing year beg leave to submit the following report: For President, for one year, Charles Davis; for Vice-President, for

two years, W. G. Wilkins; for Directors, for two years, Julian Kennedy and Thomas P. Roberts; for Secretary, for one year, Daniel Carhart; for Treasurer, for one year, A. E. Frost.

JAMES M. CAMP,
ALEX. DEMPSTER,
F. ENGSTRÖM,
WM. METCALF,
W. L. SCAIFE,
Chairman.

On motion the chair appointed Messrs. W. G. Wilkins, G. Kaufman and H. J. Lewis to be members of a committee to audit the accounts of the Treasurer, and report at the next meeting.

Mr. G. H. Paine's motion at the last meeting to adopt the metric system in the proceedings of the Society was then brought up for discussion.

THE PRESIDENT: Mr. Paine, have you anything to say this evening on the subject of the adoption of the metric system?

MR. PAINE: Mr. President, I think I have little or nothing to say in addition to what was said at the last meeting. Mr. Brashear was interrupted in what promised to be a very interesting talk, and I would like to ask the Society to signify their desire that he go on with it, or ask Mr. Brashear's consent to go on with it.

THE PRESIDENT: The Society is always willing to hear from Mr. Brashear.

Mr. J. A. BRASHEAR: Mr. President, I do not know that I have much to add to what I said at the last meeting, and it is hardly fair to take up the time of what promises to be a very interesting paper, but I certainly think from the position this Engineers' Society takes in the engineering world, and from the fact that the metric system is so uniformly used abroad, and is being adopted at home, that we ought to take prompt action on the resolution; we will be compelled to do so after awhile, and we might just as well commence at once.

I find in talking with American engineers that there are

some arguments against the adoption of the metric system, but I think they are very feeble, and I do think that sooner or later we must adopt this decimal system.

It may be that the world can unite after awhile on some other standard, but I think the metric system is now so well established that there is no reason why we should not take hold of it. I had a little difficulty in getting my workmen interested in it, but they are now just as much pleased as they were displeased in the beginning. We do not work entirely to the metric system, but it is much the fault of those who order apparatus that we do not. Here is an instance: I received a letter last week from a gentleman who uses the metric system, and who was one of the physicists that went over to Paris to assist Prof. Michelson in his determination of the value of the metre in terms of light waves. In sending an order for a range finder, some of the measurements were given in the metric system, and some in feet and inches, and this is where we find difficulty. But when we get orders from the Smithsonian Institute and all foreign physicists and astronomers, the measurements are always given in the metric system.

When we have a system that is uniform, we can say to the mechanicians of Paris, "Make us a piece of tubing so and so, of such a size, and with a screw thread on it." It will not be necessary to say what the size of the thread will be, as they will know what the thread must be from the measurements given of the tube. The result is that one part of an instrument can be fitted nicely into another, and everything will go on smoothly.

If you want to use both systems, all right. After a while we can drop the old one. I think we should take hold of it right at once; as my friend, Mr. Becker would say, "Take the bull by the horns."

Prof. F. C. Phillips: It would be unsafe for any member of the Society to speak for so large a body as the chemical section, but I am inclined to think that that branch of the Society would be in favor of using the metric system. Of course, engineers have different measurements from the chemists, but I would like to hear from some of the members who are here; if I am wrong, they will at once correct me.

MR. K. F. STAHL: I believe that the chemists here all agree with what Professor Phillips said. We are in favor of changing; in fact, chemists all use the metric system in publications of the society. The chemist is enabled to do his work quicker with the metric than with the English system; in fact, nearly all the chemists, except a few old English ones, have adopted the metric system. I think that nearly all the chemists here are heartily in favor of the change.

MR. PAINE: I do not know whether or not it is intended that the Society shall dispose of this question to-night, but as Mr. Brashear said at our last meeting, there is no use in putting the matter off beyond a certain time. We ought to know by this time what the metric system is and what it will accomplish. It seems to me that the civil engineers stand in most need of it; therefore, let us make a move towards its adoption. We now have an opportunity, it seems to me, to do something decisive in the matter.

MR. E. SWENSSON: I would like to state that during my short professional career the variations in measurements have caused the majority of my mistakes in business. First, in my early school days I learned eighths, sixteenths and thirty-seconds, and in Sweden, where I came from, tenths, and later on I learned the metric system. When I came to the United States, I had to go back to twelfths, or twelve inches to the foot. In railroad work we have ten parts of a foot, and the bridge men use twelve inches to the foot, and civil engineers have also to deal with architects' measure. Every time I make a mistake, it is on account of the measurements; so for my part I think I voice all the bridge-builders' opinion in the matter, and I would like to read a little article in the *Engineering News* on this subject. (Reads article.)

In addition to that, I will say that we have done work at Keystone for the Brazilian people for their service; we had to use the metric system. They did complain a little, however, about our method of shipping; they say that the English and Germans shipped better, and the goods are received in better condition.

THE PRESIDENT: I think that Mr. Scaife, during his life

abroad, has seen much of the workings of the metric system, and might have something to say.

MR. W. L. SCAIFE: I was not at the last meeting, so do not know exactly what the motion was.

THE PRESIDENT: The motion was simply, in effect, that the metric system shall be used by the society in its communications and papers.

MR. SCAIFE: As I understand it, his motion was, that only the metric system be used.

THE PRESIDENT: That was the motion.

MR. SCAIFE: I am thoroughly in sympathy with the ideas expressed here, if they could be realized at once; but engineers, as a rule, and business men, are servants and not masters; they have to furnish what is called for, and in the shape in which their customers demand it; therefore, it seems to me, that the motion should hardly pass, because the public are not prepared, as yet, to immediately adopt the metric system in our shops and engineering works.

I spent considerable time in countries where the metric system was used, and I saw nothing—so far as I remember—but what favored it. It is much easier to make calculations with, and facilitates measurements and commercial intercourse much better than our present system. There are certain problems which can be better solved by the metric system than by the complicated figuring of our own. In all probability the metric, or some similar system, will be adopted in this country at some future time; but I think the proper position for this society to take at the present time, would be to express a desire that the members should state their measurements in the metric system, leaving it to them to use also ordinary terms, but not making it imperative to use the metric system alone. In this way you will not deter members from presenting papers, which is a very easy thing to do, but will educate them and the public in the use and merits of the metric system.

MR. PAINE: There is nothing prohibitory in that motion; it is not intended to prohibit entirely the use of the English weights and measures.

THE PRESIDENT: When the German engineers came over, a number of them called on me. I showed them around, and in explaining to them I thought I would make the thing easy for them to understand; so, I changed the English measurements into the old German measurements which were in vogue when I left there, and long after, I think, but I might as well have used Greek. They said, "We don't know anything about that, it is all Greek to us." It was wholly forgotten, and became like an extinguished race, nothing more heard of it, and it would be the same thing here if the metric system were adopted.

MR. BRASHEAR: I have many inquiries sent me by the Germans, Italians, Russians, Hungarians, and by almost every nation on the face of the earth, in the interest of science, and all their measurements are in the metric system. All their catalogues are dimensions in the metric system.

If we adopt the metric system, I think that in a very short time we will become so used to it that it will be no trouble at all to use it, and we will all become thoroughly convinced of its great superiority over the old system.

MR. KAUFMAN: There is no question as to the metric system being better than ours, but how much good will it be if we adopt it in this society and do nothing else? I do not think it would do much good in getting the people at large to use it. I think a great deal of the Engineers' Society, but I do not think we would have very much influence in bringing about the desired change, and all we would accomplish by having our papers in the metric system would be to use it about once a month.

MR. LEWIS: Mr. Kaufman spoke of the effect of this motion, and I would, at the risk of threshing old straw, like to state two things; one is that we are becoming the correspondents of many foreign technical societies. Our proceedings go there to them, and probably if we succeed in making them intelligible they will be read by them.

Another thing is that if we use the metric system in giving at least principal dimensions in the body of a paper, my suggestion would be (and I may make a motion to that effect further on) that we should carry for the present parallel dimensions, *i.e.*, that

the metric length, or the metric volume, whatever it may be, should follow the English unit to the text and that principal dimensions on all drawings should be given in the metric system as well as in the English system. This would teach us so far as units of length go, and it would help us and put us just that much ahead if the change does come. It would teach us to think in meters and so for that reason I would move an amendment to the motion so that our proceedings would carry in the text the English unity and the metric unity. I would suggest that on drawings all principal dimensions at least should be in the metric system.

Motion seconded.

THE PRESIDENT: It is moved and seconded as an amendment to the original motion of Mr. Paine that the English measure be added to the metric measure in all papers presented to this society; that the metric equivalent shall be given in the text and that all principal dimensions be given in the metric system. Is not that the idea, Mr. Lewis?

After considerable further discussion of this question on the part of Messrs. Brashear, Swensson, Lewis, Paine and others, the motion as amended by Mr. Lewis was put to vote by the chair and lost.

THE PRESIDENT: We will now proceed to vote on the original motion made by Mr. Paine, which provides that in all papers read before this society all dimensions, quantities, etc., shall be expressed in the terms of that system of mensuration known as the metric system. Are you ready for the question?

The motion as originally read by Mr. Paine was carried.

Prof. Phillips here read Mr. T. P. Roberts's paper entitled

A PROPOSED METHOD OF INCREASING AT CRITICAL TIMES THE NAVIGABLE DEPTH OF THE UPPER OHIO RIVER BY ARTIFICIAL MEANS.

BY THOMAS P. ROBERTS.

THE upper portion of the Ohio river, that is to say, the part between Pittsburg and the mouth of the Great Kanawha river, a distance of 263 miles, has an average descent of $\frac{7}{10}$ of a foot per

mile. The rate of fall between Pittsburg and Wheeling, 90 miles, being .86 foot per mile. The navigation of that portion of the river above the Kanawha, and more especially above Wheeling, is rendered precarious by reason of the irregularities of the rainfall and evaporation. It is quite true, that during some years there may be only two or three months, and these generally confined to the period from the middle of July to the middle of October, when the river is not deep enough for what is termed the "packet trade;" that is, for passenger and freight steamers able to navigate on a depth of 4 feet; but for the important coal trade on the Ohio from Pittsburg, the navigation depends for its success, after June 1st to the end of the year, upon freshets, and hence it occurs some years that there may be a fairly good stage for light draught vessels, while the coal fleets at Pittsburg may be tied up, waiting months for the storms necessary to produce navigable water.

For the benefit of those not acquainted with the river coal business, it may be stated that there are employed in the business, and owned in Pittsburg, about 125 powerful towing steamers, or, rather, "pushing" steamers, for it would be impossible to tow anything on the Ohio. In 1889, when accurate records were obtained from twenty-two firms or individuals doing the great bulk of the business, there was reported to be engaged of cargo boats as follows:

	No.	Tonnage.
Coal boats, ...	1467	1,174,600
Coal barges, ...	1776	958,100
Coal flats, ...	648	120,800
Total, ...	3891	2,253,500

This aggregate of tonnage is greater than that owned in any city in America, if not in the world.

The average coal boat is 170 feet in length by 25 feet in width, and when loaded to $7\frac{1}{2}$ or 8 feet draught, carries about 850 tons of coal. Barges are usually 130 feet long and 24 feet wide, and carry from 400 to 500 tons, when drawing about 6 feet. Sometimes fleets are made up of boats and barges only partially loaded in order to take advantage of freshets affording insufficient depths

for fully laden vessels. The average coal fleet, as made up in our harbor for transportation to Cincinnati or Louisville, carries about 10,000 tons. Below the falls of the Ohio, at Louisville, three "Pittsburg fleets" are sometimes combined in one, so that 30,000 tons may be taken by one of the larger class of tow boats to Memphis, New Orleans, etc. Such a fleet would cover about 8 acres of the river.

For the safe navigation of barges, a depth of fully 8 feet is required in the river from Pittsburg out, and for fleets of coal boats a depth of not less than 10 feet is demanded. The reason that this margin of depth is necessary becomes apparent when we consider the great area, and particularly the width, covered by the fleets, in conjunction with the irregularities of the currents and shapes of the channel passing shoals and bars in the chutes of the numerous islands on the Ohio.

That the river coal trade is almost altogether dependent upon short-lived freshets in the river is quite clearly shown from the records. Thus, for the years 1872 to 1889, both inclusive, a period of eighteen years, the mean monthly depth of the Ohio at Pittsburg was as follows, in feet and tenths:

January.	February.	March.	April.	May.	June.
7.9	8.6	7.9	8.0	5.3	4.6

July.	August.	September.	October.	November.	December.
3.8	3.2	2.8	3.1	5.2	6.7

Annual mean, 1872 to 1886, 5.855 feet.

Not one month is shown to have a mean depth sufficient for coal boats, and only four months are shown to be reasonably reliable for barge navigation. Very trying indeed is it upon the patience of the operators; very frequently with hundreds of thousands of tons of coal loaded; and as it was the case recently, with a million of tons loaded; to see the river come up sometimes to within a few inches of the desired depth, then to decline; and these tantalizing rises are of more frequent occurrence than is generally supposed.

Existing Condition of the River Improvements.

Before entering upon my subject it will be well to advert to the means which the government has undertaken to improve the navigation of the Ohio.

As early as 1824 the government constructed a few wing-dams or dikes, mostly below Louisville, to confine the water to one channel where it displayed a tending to spread. Again, during the period between 1838 and 1844, more of these dams were constructed, and since 1867, the work of their construction has been pushed with considerable energy, there having been expended upon them, and in dredging operations, since 1867 to the present time, several millions of dollars. The result has been manifested in a considerable lengthening of the time the passenger and freight boats can navigate, and the construction of these dams has proved also of marked benefit to the coal trade in rendering the navigation of many difficult and dangerous places much safer, but this is about all that can be said. With all this considerable expenditure in the work of general improvement there has been no increase in the number of days during the season that the coal fleets can leave the harbor of Pittsburg, nor do the United States engineers claim that the construction of dikes and dredging operations alone can do this.

As a more radical system of improvement, even for the benefit of the light business of the river, was demanded, a series of adjustable dams with locks has been devised. The call for the construction of these permanent works arose, as a matter of fact, long before the time the coal trade from Pittsburg had reached any considerable proportions, and when the consensus of opinion was that six feet depth should be perennially maintained in the river. At one time even the coal men favored a system of locks and dams, but for many years past their voices have not been heard in advocating the extension of the system below the dam already constructed. In 1884 the first adjustable dam was constructed at Davis Island, four miles below this city, and work on the fifth dam, thirty-two miles below the city, is now in progress, though no appropriations have been made by Congress for the construction of dams Nos. 2, 3, and 4, intervening between Nos. 1 and 5.

The cost of these adjustable dams with their locks is from $800,000 to $1,000,000 each; and as not less than eleven or twelve of these would be required to reach Wheeling, and thirty in all to extend the navigation to the mouth of the Kanawha, involving an expenditure to the latter point, certainly in excess of $20,000,000, the prospect of their early construction is dubious in the extreme. Whether the coal men are correct in their belief that they cannot do a profitable business excepting by the movement of their freight in great fleets not subject to the possibilities of delays in the passage of the dams, is a question I cannot undertake to debate here, but that the construction of the dams would revolutionize their present methods there can be no question. I can only say, as a disinterested observer, that so long as the present doubt exists, but little promises to be done for the radical improvement of the upper Ohio river.

Col. Ellet's Proposed Method of Improvement.

In the early fifties, Col. Charles Ellet, the distinguished canal and river hydraulic engineer, equally noted in suspension-bridge construction by his works on the Schuylkill, the Niagara, and the Ohio rivers, as well as in railroad and naval engineering, through publications in reports of the Smithsonian Institute, and in 1853 in book form, fairly startled the people of the Ohio valley with the boldness of his proposition to improve the depth of their noble river by means of immense storage reservoirs to be constructed upon its principal tributaries. He expected to accomplish two important objects with these reservoirs, viz., first, to hold in them flood-waters, and thus to greatly restrain the effects of floods in the main valley; and second, to equalize the depth of the river so that, without any locks and dams, there would be a depth of not less than six feet in the unobstructed channel of the Ohio throughout the entire year.

The conception was certainly a grand one, and supported as it was by an array of figures embracing areas, rainfalls, evaporation, and river records, there seemed to be in the minds of most of his readers a conviction that he had demonstrated the project to be practicable. One branch of Congress met the appeals, which arose

in behalf of Ellet's project, by authorizing the appropriation of $500,000 to commence the surveys and begin the work of actual construction of reservoir dams.

Prominent among the opponents of the Ellet scheme was W. Milnor Roberts, C.E., who, in a rival publication, endeavored to show that while Ellet's theories were based upon plausible statistics, the sites for his gigantic reservoirs could not be found, and even if found they could not possibly restrain the great floods, because almost invariably the reservoirs, according to the records presented by himself from old Pennsylvania State canal surveys, would have been full when the great flood-producing rains occurred. The opposition to the Ellet project, thus inaugurated, led to neglect and its final abandonment. It was simply one of the things "too good to be true."

To attempt to maintain a perennial depth of 6 to 7 feet in the unobstructed channel of the river is, however, quite a different thing from what is now suggested for consideration, viz., the feasibility, at critical times, of assisting for brief periods the coal-boat navigation of the upper Ohio river by increments of water from storage dams or reservoirs, constructed and maintained solely for that purpose.

I would hesitate to say that it would be impossible to assist the low-water navigation of the Ohio river to some appreciable extent by the proposed means, but I cannot, from personal knowledge and data in my possession, relating to the hydrography of the tributaries of the Ohio, help expressing the opinion that the outlook for such a project is exceedingly discouraging. The irregular nature of the seasons and the vast expenditure concerned in the construction of dams and for land damages, precludes even the hope with me that any such project will ever be undertaken.

According to Ellet (p. 293, *Mississippi and Ohio Rivers*), during the years 1843 to 1848 inclusive, the total annual discharge of the Ohio at Wheeling varied between 555,482,000,000 cubic feet, the minimum, and 1,142,258,000,000 cubic feet, the maximum, with an annual average of 835,323,000,000 cubic feet discharge from 25,000 square miles. The drainage of rainfall which fell on this territory and which actually passed Wheeling varied

from as low as 9.83 to 20.20 inches, the discharge averaging about 40 per cent. of the total rainfall, which last figure agrees fairly well with the actual experience in Western Pennsylvania with canal reservoirs, and thus it adds to faith in the reliability of the figures taken from Ellet, which, later on, will be referred to. For several consecutive weeks, and even months, during occasional years the depth of the river between Pittsburg and Wheeling may never reach as much as 2 feet, and during such exceptional periods to increase that depth even to only as much as 4 feet, and supply the wastes of excessive evaporation; which is, unfortunately, the concomitant of low water periods—is far beyond the limits of the task I have undertaken to advocate.

Reservoirs on the Upper Mississippi.

I am aware that very encouraging arguments in support of the idea of improving the low water depth of the Ohio may be drawn from the results of the workings of the reservoirs intended for the improvement of the Upper Mississippi, but the conditions there are quite different from what we have in this region of the country. There are, about the heads of the Mississippi, chiefly in Minnesota, numerous lakes of considerable drainage areas, with sometimes quite narrow outlets. The United States engineers, who investigated the country to which reference is made, advised the construction of forty of these reservoir dams, but up to the present time, owing to the conflicting interests of the lumber men, only four dams, or one-tenth of the number estimated to be necessary, have been completed. For an extended report upon the Mississippi reservoirs reference may be made to the report of Mr. R. Davenport, assistant to Major A. W. Jones, U. S. Engineers in the report of the chief of engineers U. S. A., 1892. I will venture to quote only a single paragraph from said report because the facts related have an important bearing upon the subject at large, and tend to the belief that the proposal for the improvement of the Upper Ohio, in a greatly modified form, is a reasonably practicable one. Major Jones says: "From such observations as means admitted in 1885 and 1886, and stated in my report of December 15, 1885, and November 5, 1886, it appears that when

the river stood at 2 feet on the United States Signal Service gauge at St. Paul, the effect of every 100 cubic feet of water per second, added to the river and steadily maintained, was equivalent to increasing the depth $\frac{1}{10}$ of a foot. The benefit of the reservoirs' volume extended over 425 miles below Grand Rapids. The increase in channel depth at St. Paul, due to the reservoir water, undoubtedly averaged 1 foot during the low-water season of 1888, a period of eighty-eight days."

Let us suppose all the water with which the United States engineers maintained an increased low-water depth of 1 foot for eighty-eight consecutive days, had been made to flow past St. Paul at intervals twice, during periods of only forty-eight hours each, the depth during these periods would have thus been greatly increased, for twenty-two times as much water would have passed during any one of the four days as was actually permitted to pass during any one of the eighty-eight days. An increase of twenty-two times the flow at a 2-foot stage of the Ohio, at Wheeling, would equal the discharge of the river at a 10-foot stage, which is conclusive evidence that the four reservoirs, so far secured for the Upper Mississippi, have more than the required capacity for doing the work desired upon the Upper Ohio, but, unfortunately, we have no Leach, nor Winibigoshish lakes, to convert so readily into great storage ponds, and must secure storage capacity in other ways.

Before dismissing the subject of the Mississippi reservoirs I desire to call attention to the important fact that the low-water discharge of the river at St. Paul is 1.8 times greater than that of the Ohio at Pittsburg, and being wider from St. Paul down than our river, a proportionally greater amount of water is required to sustain it at a given depth than would be the case upon the Upper Ohio.

Requirements of the Ohio River Coal Trade.

It would doubtless sometimes occur that if coal fleets were assisted by artificial flood waves to the mouth of the Beaver river, 30 miles below this city, they would not need such aid any farther, and still less frequently would they require assistance below

Wheeling, but as there are times when they would need it even to below Buffington Island, 214 miles distant, as has been proved in the records of the navigation of the river; and as I know from personal observations during my four years' connection with government work on the Ohio; to be complete, the project should provide means for making the navigation safe, at least as far as the island named. Artificial flood waves, much more than natural ones, need increments as they pass down, provided it is expected to maintain them with navigable heads. On the Upper Mississippi, it was shown that an artificial head of 5 feet at Grand Rapids was diminished to 1 foot at St. Paul, in a distance of about 250 miles. Hence the investigation should embrace a study of the capabilities of the several tributaries of the Ohio, at least between Pittsburg and the mouth of the Little Kanawha, 187 miles. For the present, however, we must be content with the problem of starting the fleets from Pittsburg. Having solved this part, the remainder of the task becomes a problem in simple addition.

In order to discover how frequent artificial swells, added to insufficient natural freshets, might have been availed of by our coal-operators in making shipments, I have consulted the river records for a number of years past, and the result is appended in the following table.

It should be explained that after 1885 the Davis-Island dam remained up for such long-continued periods that the 5-, and often the 7-foot marks, at Market Street, affected as they are up to those limits by back-water from the dam, would be far from recording the real depths in the Ohio below that dam, and, accordingly, I rested with thirteen years' record, viz., 1872 to 1884 inclusive, during which time the dam was not in existence. Further, it should be explained that sometimes it occurs with a rapid rise from the Allegheny and low water in the Monongahela, the depth of the Ohio is as much as 18 inches more than the Market-Street mark would indicate. There being, however, no other records prior to 1885, the old records must be taken for what they are worth. The figures were obtained from the daily reports in the U. S. Weather Bureau office. The months from June

NUMBER OF DAYS IN CERTAIN MONTHS - 1872 TO 1885. RIVER BY PITTSBURG MARKS WAS AT, OR ABOVE, GIVEN DEPTHS. Compiled from U.S. Official records.

	JUNE				JULY				AUG.				SEP.				OCT.				NOV.				DEC.			
	No. OF DAYS AT OR ABOVE-FEET-				No. OF DAYS AT OR ABOVE-FEET-				No. OF DAYS AT OR ABOVE-FEET-				No. OF DAYS AT OR ABOVE-FEET-				No. OF DAYS AT OR ABOVE-FEET-				No. OF DAYS AT OR ABOVE-FEET-				No. OF DAYS AT OR ABOVE-FEET-			
	5	7	8	10	5	7	8	10	5	7	8	10	5	7	8	10	5	7	8	10	5	7	8	10	5	7	8	10
1872	13.	7.5 3.	H.W. 0	0	7	9.3 4	H.W 3.	0	2	5.2 0	H.W. 0	0	0	3.3 0	H.W 0	0	6	9.5 5	H.W. 3	0	8	6.2 0	H.W. 0	0	16	10.4 7	H.W. 6	1
1873	0	4.7 0	0	0	19	8.8 5	1	0	17	9.8 7	3	0	0	3.5 0	0	0	11	13.1 11	10	7	29	13.7 8	6	3	30	24.6 21	18	11
1874	2	6.0 0	0	0	4	7.4 1	0	0	4	5.8 0	0	0	0	3.2 0	0	0	2	6.1 0	0	0	7	9.0 3	2	0	28	20.6 10	4	3
1875	1	5.2 0	0	0	10	13.6 6	5	3	14	21.0 9	7	5	0	3.8 0	0	0	3	5.9 0	0	0	29	13.5 12	8	3	26	20.3 18	15	10
1876	0	4.7 0	0	0	4	6.7 0	0	0	0	4.8 0	0	0	21	20.8 9	5	3	4	5.8 0	0	0	14	8.8 5	3	0	0	4.8 0	0	0
1877	10	8.2 4	1	0	6	7.6 2	0	0	0	3.8 0	0	0	0	1.9 0	0	0	2	6.2 0	0	0	18	18.2 6	5	2	11	13.3 5	4	2
1878	15	8.9 2	2	0	0	4.8 0	0	0	2	7.2 1	0	0	5	10.7 3	3	2	3	6.5 0	0	0	19	18.7 10	8	8	24	23.4 19	16	9
1879	0	3.9 0	0	0	3	7.5 1	0	0	0	4.9 0	0	0	0	1.6 0	0	0	0	0.1 0	0	0	3	7.5 2	0	0	26	15.4 12	7	4
1880	7	15.9 4	4	2	2	5.8 0	0	0	2	7.7 1	0	0	0	4.0 0	0	0	0	2.8 0	0	0	12	8.7 3	2	0	14	18.5 8	5	3
1881	19	25.1 14	8	5	2	8.4 1	1	0	0	2.0 0	0	0	BELOW ZERO ALL THE MONTH				0	1.3 0	0	0	7	12.8 5	4	2	21	16.5 15	12	10
1882	22	10.5 11	6	1	10	12.2 6	3	2	5	7.0 1	0	0	7	8.3 1	1	0	0	4.7 0	0	0	0	3.3 0	0	0	9	7.5 1	0	0
1883	29	11.3 16	11	3	18	10.9 7	4	1	3	6.3 0	0	0	0	1.8 0	0	0	4	10.1 3	2	1	16	8.1 7	1	0	10	18.8 6	4	3
1884	4	8.0 2	1	0	2	8.3 2	1	0	1	5.3 0	0	0	0	4.1 0	0	0	1	5.6 0	0	0	0	3.0 0	0	0	17	12.9 10	5	2
AVERAGES	9.4	4.3	2.5	0.9	6.7	2.7	1.4	0.5	4.0	1.5	0.8	0.4	2.5	1.0	0.7	0.4	2.8	1.5	1.2	0.5	12.5	4.7	3.0	1.4	18.0	10.2	7.4	3.7

INTERMEDIATE FIGURES INDICATE HIGHEST STAGE OF WATER IN FEET AND TENTHS.

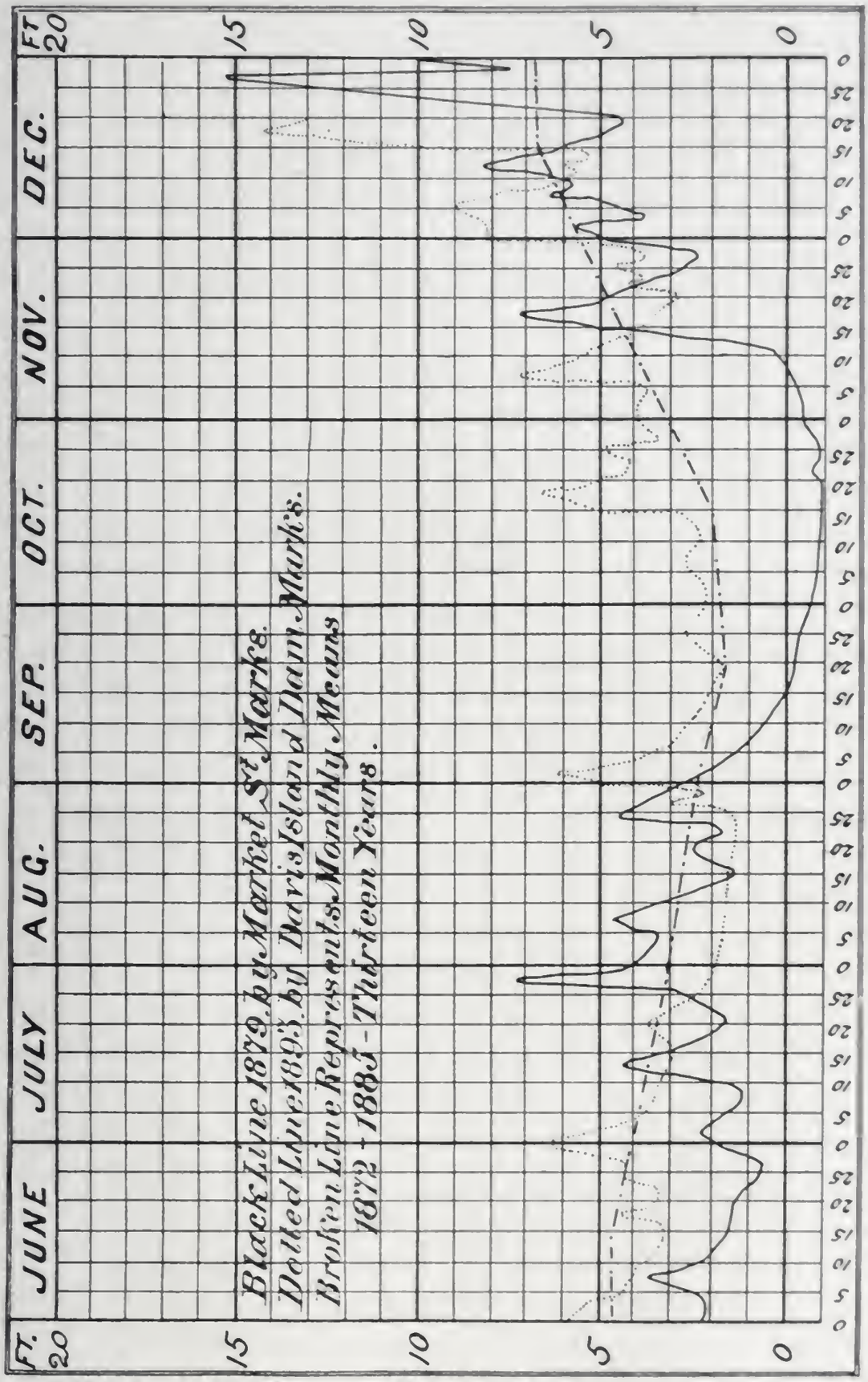
Black Line 1879 by Market St Marks.
Dotted Line 1893 by Davis Island Dam Marks.
Broken Line Represents Monthly Means
1872 - 1885 - Thirteen Years.
JUNE
JULY
AUG.
SEP.
OCT.
NOV.
DEC.
FT.
20
15
10
5
0

to December inclusive, are taken, because during the spring months barge rises are usually frequent enough to satisfy the demands of the trade. In each of the months taken for the thirteen years, the number of days the river was at, or above, 5 feet, 7 feet, 8 and 10 feet, has been separately counted. Five feet was adopted as the minimum because it is deemed to be the least depth that it would be practicable, within reasonable limits of cost, to attempt to increase the depth by artificial means, and for the further reason that it so happens that rises of that height are of frequent enough occurrence for the trade, could they be improved upon by the methods proposed.

A considerable rainfall over a widely extended region, particularly during the summer and early fall, is necessary to raise the river to 5 feet depth, involving conditions of the atmosphere, such as coolness, and a reduction of the rate of evaporation, which may be felt for several days. Hence with cool, freshly fallen rain-water, filling the prism of the Ohio to the depth of 5 feet, we have a reliable substratum upon which to add another layer of water. So, with a natural rise of 5 feet, we may consider the means to convert the same into an 8-feet, or barge rise. Or, should the natural rise reach $7\frac{1}{2}$ feet, we might propose to make it 10. If it reached, say 9 feet, we might propose to make it 12, if needed, and maintain the increased depth for two days, in each instance.

Remarks upon the Records.

In the following summary of remarks upon the records of the several years, it is to be supposed that the reservoirs are convenient and ready for use to create the additional rises upon the dates specified.

1872. Longest interval, without 10 feet, April 13th to December 22d, 8 months and 8 days. Longest interval, without 8 feet July 20th to October 27th, 3 months, 7 days. A very little additional water, October 27th to 30th, would have maintained the river between a 10 and 11 stage. August 18th to 20th, 8 feet of water could have been had. River frozen up December 8th to 15th, the 10-foot natural stage coming up after the freeze-up, viz.,

December 23d. Two rises, in addition to those coming naturally, might therefore have been had during this year.

1873. Longest interval, without 10 feet, May 6th to October 22d, 5 months, 17 days. Longest interval, without 8 feet, August 19th to October 22d, 2 months, 3 days. The July 6th rise of 8.8 might have been made 10 feet or over. So, also, the August 20th 8.0 rise might have been made 10 feet to advantage. The year was generally favorable for barge rises, and after October 22d nothing more was needed for the remainder of the season.

1874. Longest interval, without 10 feet, May 3d to December 29th, 7 months 26 days. Longest interval, without 8 feet, May 7th to November 24th, 6 months 18 days. This year would strikingly have illustrated the advantages of reservoir dams had they been in existence. The 7.4 rise of July 30th might have been made 10 feet for two days, and very easily the 5.8 rise of August 10th an 8 to 9 feet stage, or the 6.1 rise of October 1st an 8 to 9 feet. Thus three excellent opportunities were afforded to break up the long season during which naturally there was not even a barge rise.

1875. Longest interval, without 10 feet, August 5th to November 25th, 3 months 21 days. Longest interval, without 8 feet, August 8th to November 25th, 3 months 18 days. The rise of 5.9 feet, October 13th—a very convenient period—might have been made 9 feet, and with this additional swell the year would have been a good one for regular work on the river.

1876. 1st. Longest interval, without 10 feet, April 17th to September 18th, 5 months 1 day. 2d. Longest interval, without 10 feet, September 20th to January 14th, 1877, 3 months 24 days. 1st. Longest interval, without 8 feet, May 24th to September 12th, 3 months 17 days. 2d. Longest interval, without 8 feet, September 21st to November 19th, 2 months. This year was remarkable by reason of the fact that so much water came during the last half of September, which is usually the lowest water period. Prior to September only barges are usually loaded, so that the big flood of that month was not of much utility to coal boats. Winter set in and the river became frozen (December 10th) be-

fore coal-boat water came again. The 8.8 rise of November 22d would have been an exceedingly favorable time to have created a 10 to 11-foot freshet. So also on July 17th the 6.7 rise could have been made 8 to 9 feet. From the records, 1876 appears to have been a bad year, especially for the coal-boat trade.

1877. Longest interval, without 10 feet, March 30th to November 25th, 7 months 26 days. Longest interval, without 8 feet, June 11th to November 24th, 5 months 13 days. The 7.6 rise of July 5th might have been increased to 10; but more important would it have been to have assisted the natural 6.2 rise of October 23d, which might have been made 9 feet.

1878. Longest interval, without 10 feet, May 1st to September 14th, 4 months 13 days. Longest interval, without 8 feet, June 12th to September 14th, 3 months 2 days. The months of September, November, and December being exceptionally good, the fall trade required little or no assistance. The August 1st rise of 7.2 might have been made 9 or more, or the June 11th rise of 8.9 might have been increased to 11 or 12 feet.

1879. Longest interval, without 10 feet, April 18th to December 25th, 8 months 7 days. Longest interval, without 8 feet, April 20th to December 12th, 7 months 22 days. This was indeed a year typical of the needs of the coal operators, having been very much like the present unfortunate season. The diagram is made to illustrate 1879 and 1893 for purposes of comparison. The July 27th rise of 7.5 might have been made 10 feet. Again, a rise of 7.5 in November might have been made 10 feet. The rise of December 12th to 8.3 might have been made 12 feet or more, perhaps, by letting all the storage go, the season being late. With these three periods made available the season would have been a fairly good one, whereas the facts are 1879 was a disastrous one.

1880. Longest interval, without 10 feet, June 17th to December 3d, 5 months 15 days. Longest interval, without 8 feet, June 18th to November 1st, 4 months 12 days. The 7.7 rise of August 22d might have been made 10 feet, and the 8.7 rise of November 1st might have been made safe for the deepest coal-boats.

1881. Longest interval, without 10 feet, June 13th to Novem-

ber 20th, 5 months 7 days. Longest interval, without 8 feet, July 24th to November 19th, 3 months 26 days. No natural rise exceeding 2 feet occurred during the three consecutive months of August, September, and October; and when the November rise did finally come, making 12.8 feet, no additional water was probably needed. The 8.4 rise of July 24th might have been made 10 feet. This year, much more even than 1878, was not a good one to display the possible utility of the reservoir system at present proposed.

1882. Longest interval, without 10 feet, July 3d to end of the year and until January 21st, 1883, 6 months 18 days. Longest interval, without 8 feet, September 13th to January 21st, 1883, 4 months 8 days. From the records it would appear that this year was exceedingly unfavorable for coal-boats, and in striking contrast with the previous year. The 8.3 rise of September 13th could have been made 10 to 11 feet; so, again, the December 13th rise of 7.5 might, with the final spurt of all the reservoirs, have been made 11 or 12 feet.

1883. Longest period, without 10 feet, July 29th to October 31st, 3 months 2 days. Longest period, without 8 feet, July 30th to October 30th, 3 months. A rise of 7.8 on October 4th might have been made 10 feet to great advantage. Another rise of 5.9 on December 10th might have also been increased to 9 feet.

1884.—Longest period, without 10 feet, April 5th to December 23d, 8 months, 19 days. Longest period, without 8 feet, July 30th to December 9th, 4 months, 10 days. A natural rise of 5.6, October 2d, might have been made more than 8 feet, or barge water. While the 9.3 rise of December 9th might have been made 12 feet, anticipating the 12 feet water which did not come naturally until December 23d. The earlier in December the coal boats can be sent out the less risk there is from the dangers of ice.

In this review of 13 years' river records it has been, it is to be hoped, made reasonably clear that at least two additional rises, sufficient for either boats or barges, could have been had each year, had the necessary quantity of water been available to draw upon. The attempt has been made to show, also, that most of the artificial rises would have come very opportunely, or after

there had been sufficient coal accumulated to warrant sending the fleets out.

Volume of Water Required to Produce Certain Effects on the Upper Ohio.

It is, perhaps, needless to remark that, before a careful investigation is instituted, which should include a series of gaugings conducted upon approved modern methods, no absolute statement can be made with regard to the volume of water which would be needed to increase the depth of the Ohio at Pittsburg from, say a 5- to an 8-foot stage, or from, say an 8- to a 10-foot stage. Without further remark or inquiry into the merits of the formula employed, it is proposed to adopt Colonel Ellet's figures of discharge at Wheeling for given stages, and apply them to the river at Pittsburg for the purpose suggested. If they should prove figures in excess of requirements for the hypothetical cases, so much the better; and, if they should prove insufficient, their insufficiencies would have to be made up in increased reservoir capacity.

Table of Discharge.

Depth in feet on Wheeling bar.	Discharge in 24 hours in cubic feet.
1.0,	102,000,000
2.0,	228,000,000
3.0,	400,000,000
4.0,	620,000,000
5.0,	864,000,000
6.0,	1,164,000,000
7.0,	1,511,000,000
8.0,	1,890,000,000
9.0,	2,314,000,000
10.0,	2,754,000,000
11.0,	3,225,000,000
12.0,	3,726,000,000
13.0,	4,279,000,000
14.0,	4,854,000,000
15.0,	5,480,000,000

According to the figures given by Ellet,* the difference in the discharge of the river, when at a 5- and when at an 8-foot stage, is 1,026,000,000 cubic feet daily; or, for two days as we should like to provide for, it is 2,052,000,000 cubic feet. The daily difference between an 8- and a 10-foot stage is shown to be slightly less than for the 3-foot as above, being only 864,000,000, or, precisely the total daily discharge at a 5-foot stage.

A reserve of storage water of about 2,000,000,000 cubic feet would answer, therefore, to maintain for two days a depth of 8 feet on a 5-foot natural depth. Or, the same 2,000,000,000 cubic feet would be more than enough to convert for two days 8 feet natural depth to 10 feet depth.

Considering the distance to be traversed by much of the water before reaching Pittsburg, and its loss from evaporation, and actual loss of head, I would think that the aim should be to find storage capacity for 2,500,000,000 cubic feet of reserve water, not to say, however, that if such a quantity, or even half of such a quantity, cannot be provided for, that the project should be dismissed. Quite recently, a rise of less than a foot, maintained for one day only, in addition to what came naturally, would have been the means of saving from wreck enough value in boats and coal to have paid for the dams which would have held the desired quantity of water.

Location, Capacity, and Number of Reservoir Dams.

It would take much time to discuss the merits of all the tributaries of our two rivers above Pittsburg for reservoir purposes, and I call attention to the first plan which has occurred to me, as presenting the elements of feasibility, to accomplish the object of storing, say 2,500,000,000 cubic feet of water; I say the first,

* Ellet's tables present deductions from actual gaugings by an empirical formula, in which the factor for slope is neglected. As the slope governs the velocity, which may vary with the same depth, as between a rising and a falling river, it follows that no formula can be constructed from which the real discharges can be obtained from the daily records of the depths as usually recorded at signal stations. Plus quantities may be given one day and minus quantities a week later for the same recorded depths.

though it, of course, may not be the best plan, and I shall be very brief in the discussion of its merits.

As it would be advisable to have the reservoir dams as near the city as possible, it occurred to me that a series of dams on the lower portions of the Youghiougheny and Kiskiminetas, arranged with flood-gates, might be so constructed as to hold more than one-half of the desired quantity of water. It would be possible, I think, on these streams to construct dams built permanently, say to the height of 8 to 10 feet, and provided with wrought-iron plate-hinged, adjustable tops, to enable them to be raised 3 to 5 feet higher during the summer season. The exact height of the dams would have to be determined by the nature of the banks of the stream.*

With about twelve such dams in the Youghiougheny between Coultersville and Connellsville we might assume that we have retained ready for use a prism of water 38 miles long, 500 feet wide and eight feet deep. These are not extravagant dimensions, and yet such a prism would contain rather more than 800,000,000 cubic feet, or very nearly one-third of the total quantity of water for which we are seeking storage. I think we might rely upon the Kiskiminetas for an equal amount, and for the remaining third we could confidentially rely upon a few dams on French creek, with others near the mouths of the Clarion, Red Bank and Mahoning. I do not speak of the main Allegheny river, though it would be favorable, as a matter of course, for many dams of large storage capacity, for the reason that dams in the Allegheny might either have to be provided with locks or else with expensive rafting chutes, and the cost of one steamboat lock would equal the cost of fully five dams such as I think would answer for the purpose in view. We have on the Monongahela, the Cheat river, available for two or three good dams, and the West Fork, though rather far up, remarkably favorably disposed by reason of its slight fall per mile, for storage purposes. There

* Both of the streams named have been, in past years, recommended for slack-water improvements. The Youghiougheny was partially surveyed for this purpose, in 1873, by the U. S. ngineers. The descent of the Youghiougheny between Connellsville and Coultersville is about 130 feet, or about $3\frac{1}{2}$ feet per mile.

are a number of creeks like Dunkard's creek on the Monongahela, or even Chartier's creek on the Ohio, where near their mouths one or two very cheap dams, would hold enough water, perhaps, to warrant their consideration. I think I have mentioned already more than enough dam sites to satisfy the conditions called for.

In connection with such systems of low dams, like those suggested for the Youghiougheny and Kiskiminetas, it would be advisable and even necessary, perhaps, to provide on their side tributaries, or on their head-waters, a system of secondary reservoirs, not intended to be drawn upon to assist in the creation of navigable freshets, but maintained for the purpose of retaining a reserve supply to refill the primary dams at any convenient time, after the latter had been emptied. It is quite essential that the usual low water discharge of the streams should not be interrupted while these dams are filling up. These primary dams having been drawn upon twice, their usefulness for the remainder of the season may be supposed to have come to an end, for as has been shown their aid would rarely be needed more than twice in one season.

No telegraphic service would be necessary in connection with the operation of the secondary dams.

In conclusion I will state that from my knowledge of the workings of the United States Weather Bureau stations, subordinate to, and receiving their instructions from the Pittsburg office, I am convinced that few, if indeed any, mistakes would occur in orders for the manipulation of the storage dams. The Pittsburg weather office has been for several years past remarkably successful in forecasting the depth of rises after the rain has fallen. Usually as much as twenty-four hours' time, after a rain storm, would be available for receiving telegraphic reports, and for preparing instructions which might have to be sent to those in charge of the flood gates.

Discussion.

The President: Gentlemen, this is a topic of great local interest, both from an engineering standpoint and from a com-

mercial standpoint. I would like to ask one question. As I understand it, the object of constructing these dams is simply to assist navigation at a period when there is not water enough otherwise; that they are simply to increase a rise of say five feet, and what occurred to me was this; that a medium rise, say five feet, is in nearly every case of very short duration; it pops up and goes down again as quickly as it came, and there is a question as to whether or not the water from your dams could be gotten down quickly enough to be of any service in aiding this rise.

MR. ROBERTS: We would have at least two days to do it in and in some cases a 5-foot stage lasts four or five days.

THE PRESIDENT: Well, two days is not a long time, but it strikes me as being a feature which must be demonstrated to me before I would be inclined to look upon that as an effective means of assisting navigation.

MR. ROBERTS: Nevertheless, nearly all the coal boat rises from Pittsburg are limited to two days' time. An immense quantity of coal can be made to leave this port in forty-eight hours easily, I say a half million tons and much more than that if the steamers' crew are on hand to move the coal fleets.

MR. W. G. WILKINS: Is it your idea to raise the river to a given height, or raise it temporarily and have the boats go down on the wave?

MR. ROBERTS: As a general rule, after the boats pass the mouth of the Beaver river they find the water increasing in depth, but in critical times arrangements would have to be made to add to that with water from tributaries below as was suggested in the paper.

MR. KAUFMAN: And such an improvement would only benefit the coal trade, would it?

MR. ROBERTS: All the other boats would take advantage of it.

MR. KAUFMAN: I have noticed in the last few years that everything in connection with the improvement of the Ohio river has been for the benefit of the coal trade. I think there will soon be a limit to the river coal trade as now carried on, and too extensive improvements in the Ohio river should not be entered into which are only beneficial for the present conditions.

Take the general traffic now on the river and likely to come; for instance, say, about 100,000,000 bushels annually. It is worth about 6 cents a bushel, giving a total value of about $6,000,000 a year; that is a comparatively small business in comparison with other business done here in Pittsburg.

MR. ROBERTS: It gives employment to more people than any other business in the world for the same capital employed and value of product.

MR. KAUFMAN: I realize the necessity for cheap coal, but a time will come when the coal in this locality (which is the best in the United States) will be wanted around home. We do not want to exhaust this coal by sending it down the river at a low price to compete with other and inferior coal. Pittsburg coal is sold at too low a rate in the lower Ohio and Mississippi river markets, and because it is in competition with the output of the Kanawha and the Alabama coal fields, the time will soon come when there will be a limit to these large "*tows*" going down the river; and I therefore believe that such a condition should be taken into consideration, and the coal trade as now carried on should not be thought of solely in suggesting improvements for the Ohio river.

MR. H. J. LEWIS: I would like to ask Mr. Kaufman what other trade there is on the river now or in prospect which compares in magnitude with the coal trade.

THE PRESIDENT: Statistics now show that the ratio of increase of shipments from the Pittsburg region down the Ohio river is steadily decreasing. I do not mean that it is not increasing, but that the ratio of increase is decreasing considerably as compared with a period of twenty years and further back. I think this is due to the fact that there are other sources of supply coming more prominently into the market, and our superior coal naturally finds a market nearer home, so that the matter is adjusting itself by its own means.

MR. ROBERTS: I think that is a very strange argument, Mr. President. Shipments of Pittsburg coal are not increasing simply for the reason that we are sending out all that we can with the water we have. The coal fields are practically illimitable, and there is no danger whatever of a failing supply. There is an

abundance of coal in West Virginia, up the Monongahela river, and coal land is worth there $10 per acre, while around Pittsburg it is worth $500 or $600 per acre; so that the coal trade is moving up the river. The veins are a great deal thicker in the upper parts, and it is much more cheaply mined there, and the volume of trade would undoubtedly be much greater if the river was reliable. Why if the little anthracite region—which covers probably no more than two counties—is shipping about 70,000,000 tons per annum, what may we not expect in the future of the immense area of the bituminous coal-fields of Pennsylvania?

If the Pittsburg coal trade could be diverted to the lakes, where it ought to go, our market would be enlarged.

THE PRESIDENT: How far back from the river is the coal mined for the river trade?

MR. ROBERTS: About a mile and a half.

THE PRESIDENT: Only the skimmings of the hillsides can go by river, and the product of these vast coal fields must find some other outlet than the Ohio river.

There is another thing that always struck me as a little curious, too, and that is why the dimensions of these coal barges are as immutable as the laws of the Medes and Persians and cannot be changed. It seems to me that if a fellow with a mule team got stuck he would either lighten the load or else get more mules to pull it. Does the whole world revolve around one coal barge? I think the proper way would be to reduce the capacity of some of the barges, so that lighter barges can go at moderate rises and the largest loads can go at the full coal-boat rises.

MR. ROBERTS: As to the proposition that the coal from the Monongahela valley must in the future seek a rail outlet to reach the market, I regard it as untenable. For instance, much of this coal goes to Memphis and New Orleans. The cost by river to New Orleans is about 50 cents per ton—2000 miles. If railroads from the mines to the river added another 50 cents, it would still be impossible for direct all-rail shipments to such distant points to compete with the river.

MR. WILKINS: It looks to me as though river improvements

were a sort of class legislation, and I do not see why Congress should do any more for rivers or coal business than for the railroads or steel works.

MR. ROBERTS: The rivers are the regulators of freight rates, and I do not consider that their improvement would be class legislation. Our commercial exchange people and shippers generally do not so regard the question, nor does Congress view it in that light.

MR. KAUFMAN: I think as Mr. Roberts does, that the rivers should be improved, but I take a decided exception to the improvement of rivers for one class of traffic which is probably decreasing. I think the other traffic should be taken into consideration. Mr. Lewis wanted to know what other kinds there were. I know that a year or two ago there was talk of putting on steel packet-boats, express-boats, between here and Cincinnati. Now, if we had the proper depth of river all the year round by means of locks and dams, I think such boats would do a very paying business. The present condition of the Ohio river will not permit the establishment of any permanent passenger and freight lines, but I am satisfied in my own mind that if the river was properly improved a very active traffic would spring up in a short time.

MR. T. H. JOHNSON: The general line of discussion seems to be on the commercial side of the question. There is one thing from an engineering point of view that I think ought to be considered. These floods are in the nature of waves, as I understand it, and the coal fleets must go down on the crest of the wave or they will be stranded.

It seems to me that to be of practical value these reservoirs should be below the city instead of above, so that their discharge could be added to the crest of the wave. If the reservoir water is discharged behind the crest of the wave, it will prolong the flood without adding to its depth. The point I wish to make is, that the additional waters must be added at the crest of the wave and not behind it; otherwise, it would not add to the depth.

MR. ROBERTS: I think it can be maintained at an even depth for two days. The "crest" of the waves I would propose to

create would be from 150 to 200 miles in length. In other words, enough water must pass out of Pittsburg to maintain that; to which, of course, other reservoirs below Pittsburg can be made to assist in maintaining the extra depth.

THE PRESIDENT: There is another question: whether the quantity of water you collect and retain in the storage reservoirs necessarily diminishes the quantity in the river below, so that when you draw upon your general reserve supply you must furnish a larger amount before a sufficient depth is reached for the floating of boats. In other words, in providing the necessary storage capacity in the tributary streams, allowance must be made for the re-supplying in the river below, the amount previously abstracted by its retention in the reservoirs.

MR. ROBERTS: The water held in the storage dams is supposed to have been caught in the spring months, when there is a surplus of water in the river. For filling them a second time, I would draw upon the secondary dams, as proposed in the paper.

THE PRESIDENT: Are there any further remarks?

Adjourned.

R. N. CLARK,
Secretary.

DECEMBER 26TH, 1893.

MINUTES OF CHEMICAL SECTION MEETING.

Mr Joseph H. Eastwick, Chairman; Mr. James O. Handy, Secretary.

Fifteen members were present.

Minutes of November meeting approved. Carborundum crystals were shown. Officers for 1894 were nominated by a committee appointed by the Chairman. They reported as follows:

We, the undersigned committee, etc., beg to report the following nominations *for officers of the Chemical Section for* 1894: For

Chairman, Mr. Karl F. Stahl; for Vice-Chairman, Mr. James M. Camp; for Secretary, Mr. Abram T. Eastwick; for additional Directors, Dr. F. C. Phillips, Mr. James O. Handy.

F. C. PHILLIPS,
A. G. MCKENNA,
H. S. MENOUGH,
JOHN E. WILLIAMS,
R. N. CLARK,
Nominating Committee.

A more detailed invitation for the members to attend The International Congress of Applied Chemistry at Brussels, Belgium, August 4, 1894, was read.

Mr. James O. Handy read a paper on "The Exact Determination of Phosphorus, by a Molybdate Method, in Iron, Steel and Ores which contain Arsenic."

A discussion followed.

THE EXACT DETERMINATION OF PHOSPHORUS BY A MOLYBDATE METHOD IN IRON, STEEL AND ORES WHICH CONTAIN ARSENIC.

BY JAMES O. HANDY,

(Chemist of The Pittsburg Testing Laboratory, Ltd.)

CLASSIFICATION OF EXISTING METHODS FOR PHOSPHORUS.

1. The *acetate* method of Mr. Blair and others.
2. The *molybdate* methods.
   - *a.* Methods in which the phospho-molybdate is weighed. (Methods of Mr. E. F. Wood and others.)
   - *b.* Methods in which the amount of yellow precipitate is estimated volumetrically.
     - *a.* By permanganate. (Methods of Emmerton, Drown, Jones and others.)
     - *b.* By alkali. (Methods of Manby, Handy and others.)
3. The combination methods.
   - *a.* The acetate and molybdate methods.
   - *b.* The molybdate and magnesia methods.

In the "acetate" methods, the phosphorus is precipitated as phosphate, after separating, by hydrogen sulphide, any arsenic which is present. The methods are long, and the manipulation difficult.

In the "molybdate" methods the phosphorus is precipitated as

TABLE I.

The Extent of the Interference of Arsenic in Phos. Determination.

Substance Analyzed.	Phosphorus contained. Per cent.	Arsenic contained. Per cent.	Method.	Temperature of precipitation.	Apparent Phosphorus. Per cent.	Error caused by Arsenic. Per cent.	Remarks.
Steel.	.096	.050	J. O. Handy's.	85° C.	.094	None.	Within limit of error.
"	"	.050	"	"	.095	"	" "
"	.098	.100	"	"	.098	"	.....
"	.098	.100	"	"	.099	" to .001	" "
"	.096	.250	"	"	.099	.003	.....
"	.096	.350	"	"	.102	.006	.....
"	.096	.500	"	"	.106	.010	.....
"	.096	.750	"	"	.111	.015	.....
"	.096	1.87	"	"	.125	.029	.....
"	.012	0.100	"	"	.012	None.	.....
"	.012	0.500	"	"	.011	"	" "
"	.012	1.000	"	"	.011	"	" "
Pig-iron.	.036	.100	"	"	.039	.003	.....
"	.036	.150	"	"	.043	.007	.....
"	.083	.100	"	"	.088	.005	.....
"	.083	.150	"	"	.094	.011	.....
"	.297	.500	" & weighing	"	.315	.018	.....
Ferro-mangan'se	.292	.500	Evaporation, neutralizat'n & weighing.	"	.313	.021	.....
Iron-ore.	.096	.500	" "	"	.135	.038	.....
Manganese-ore.	.212	.500	" "	"	.264	.052	.....

ammonium phospho-molybdate, and weighed or titrated arsenic, which is believed to be of rare occurrence, is disregarded.

It is, however, a fact that when arsenic is present in a solution from which phosphorus is precipitated as phospho-molybdate, a portion of the arsenic accompanies and contaminates the phosphorus precipitate.

The "molybdate" methods are, in general, very short, and their manipulation simple. They are widely used. With the drawback of arsenic interference removed, the molybdate method takes front rank for simplicity, brevity and accuracy.

TABLE II.

Experiments Proving that Arsenic Does Not Precipitate When Little or No Phosphorus is Present.

Experiments.—Two grammes of magnetic iron-ore (a very pure concentrate) showed .002 per cent. of phosphorus. A duplicate containing 0.500 per cent. of arsenic in the fully oxidized form showed also exactly .002 per cent. of phosphorus.

The filtrate, which contained arsenic, was heated for a short time to 60° to 70° C. before molybdic acid or arseno-molybdate began to separate. The same result was repeatedly obtained with arsenical filtrates from phospho-molybdate precipitates.

A solution of arsenic acid in nitric acid, properly prepared as for phosphorus determination, gives no precipitate at 85° C. with molybdate solution, unless the heating is continued.

The experiments described in Tables I. and II. prove very clearly that the precipitation of arsenic with phospho-molybdate is a mechanical one; that the arsenic is only *dragged* down. With little or no phosphorus, no arsenic precipitates.

The case is parallel to the contamination of the first ferric hydrate precipitate with lime, or of the first oxalate of lime precipitate with magnesia.

In these cases, solution and reprecipitation of the contaminated precipitates effects their purification.

Experiments (Table III.) prove that the same treatment, properly applied, is equally efficient in purifying arsenical phospho molybdate.

The exact method of procedure follows Table III.

TABLE III.

Elimination of Arsenic from Phospho-Molybdate.

Substance Analyzed.	Phosphorus contained.	Arsenic contained.	Method of—	Temperature of precipitation.		Phosphorus found.	Error.	Limit of Error.
				1st.	2d.			
Steel.	.096	0.500	J. O. Handy.	80°C.	75°C	.096	None.	" "
"	.096	0.500	"	"	"	.096	"	" "
"	"	"	"	"	"	.097	.001	Higher.
"	"	1.000	"	"	"	.097	.001	"
"	"	0.000	"	"	"	.095	.001	"
"	"	0.000	"	"	"	.095	.001	"
"	"	0.000	"	"	"	.094	.002	Same.
"	"	0.500	"	85°	85°	.097	.001	Higher.
"	"	0.500	"	"	80°	.094	.002	Same.
"	.038	0.500	"	80°	75°	.036	.002	"
"	"	0.500	"	"	"	.037	.001	Higher.
"	"	0.500	"	"	"	.039	.001	"
"	"	0.000	"	"	"	.037	.001	"
Pig-iron.	.082	0.500	"	"	"	.081	.001	"
"	"	0.500	"	"	"	.081	.001	"
Ferro-mang'n'se.	.282	0.500	Evap. & weighing	85°	75°	.281	.001	"
Pig-iron.	.286*	0.500	JOH & "	"	"	.289	.003	Lower.
Iron-ore.	.083	0.500	Ev'p. & "	"	"	.085	.002	Same.
Manganese-ore.	.199	0.500	"	"	"	.200	.001	Higher.

* A little lost.

The Method of Redissolving the Phospho-Molybdate and Freeing it From Arsenic.

Having separated the phosphorus as phospho-molybdate by any good method (see note below), and washed it well with 1 per cent. HNO_3, place a 12-ounce Erlenmeyer flask under the funnel.

Dissolve the Y. P. by NH_4OH wash (1 : 6), using about 15 c.c.

in all, and wash it into the flask. Dilute the solution to about 75 c.c. and heat to 75° C. (and add a mixture of 10 c.c. of HNO_3 (1.42 Sp. Gr.), and 25 c.c. of molybdate solution (E. F. Wood's formula). Shake well, filter and wash (*a*) with 1 per cent. HNO_3 and dry and weigh, or (*b*) with 1 per cent. HNO_3 and $\frac{1}{10}$ per cent. KNO_3 and dissolve and titrate (Handy's method).

The greater part of the analytical work of this paper has been done by my assistant, Mr. George O. Loeffler.

Methods Used.

For Steel and Pig-Iron:

The method used in all analyses of steel and pig-iron, the results of which are given in Tables I. and III., was the method published by the author in 1892. (Transactions E. S. of W. Pa., March, 1892, and *J. A. A. C.*, April, 1892).

For Ferro-manganese:

Two grammes dissolved in HNO_3 (1.42) and the solution evaporated to dryness. The residue having been redissolved in HCl. (1.20), the solution was diluted and filtered. The filtrate was treated with ammonium hydrate until ammoniacal, then acidified with HNO_3, heated to 85° C., and precipitated with 50 c.c. molybdate solution.

For Iron and Manganese Ores:

Two grammes (or more) dissolved in aqua regia containing 5 per cent. HNO_3 by volume, and the solution evaporated to dryness. Subsequent procedure was as above described in the analysis of ferro-manganese after evaporation. Phosphorus in the insoluble residue was separated and determined. *Arsenic* was added as dry arsenious oxide to the samples when weighed out. The reagents used in the analyses oxidized the arsenic to arsenic oxide.

Discussion.

Mr. A. G. McKenna: I have never found any steel containing one-tenth per cent. of arsenic. Arsenic is present very rarely.

MR. J. O. HANDY: But steel is found with arsenic in it, and that fact makes it desirable that we should know a way of getting rid of it if it is present.

MR. K. F. STAHL: I have had no experience with arsenic in iron or iron ores, but have had some experience with arsenic in pyrites. Most of the pyrites found in this country contain large amounts of arsenic. The pyrites found in Illinois probably contain none, and those found in New England and the South contain very small amounts. I suppose most iron ores contain small amounts of arsenic which is usually overlooked.

MR. A. G. MCKENNA (to Mr. Handy): You say that phosphorus will not come down unless you add more molybdate. Is it because the conditions are not exactly right?

MR. J. O. HANDY: I mean under the conditions of my experiments.

MR. A. G. MCKENNA: It would certainly be possible, it seems to me, with the proper amounts of free acid and ammonium nitrate, to precipitate all the phosphorus.

MR. J. O. HANDY: That is, with only the theoretical amount of molybdate present?

MR. A. G. MCKENNA: Yes. Because Hundeshagen made a number of experiments showing that he could get correct results in precipitating phosphorus with just the theoretical amount of molybdic acid. Practically, one would always add a little molybdate solution. I should not think it would be necessary to add the amount which you have used, viz., 25 c.c.

MR. J. O. HANDY: It may be that ammonium nitrate could be substituted for part of the molybdate solution used for re-precipitation.

MR. A. G. MCKENNA: Another thing. One great objection to the molybdate method is that molybdic acid sometimes comes down. I know there are times when high results are obtained by the molybdate method, and it seems to me it must be due to precipitation of molybdic acid. Sometimes a solution of molybdic acid will precipitate at lower temperatures than at others. For instance, I have known molybdate solution to precipitate at 70° C., if made up in accordance with Wood's formula. Of

course, I do not know whether the molybdic acid used was pure molybdic acid.

Mr. J. O. Handy: I am quite sure it could not have been pure, and that the molybdate method was not at fault.

Mr. A. G. McKenna: In case the precipitate did drag down molybdic acid, it seems to me it would be a good thing not to add much more molybdate solution when reprecipitating.

Adjourned.

J. O. Handy,
Secretary, C. S.

OFFICERS FOR 1894.

PRESIDENT,

One Year—CHARLES DAVIS.

VICE PRESIDENTS,

Two Years—W. G. WILKINS. One Year—THOS. H. JOHNSON.

DIRECTORS,

Two Years—JULIAN KENNEDY, Two Years—THOS. P. ROBERTS.
One Year—W. E. KOCH, One Year—EMIL SWENSSON.

SECRETARY,

One Year—DANIEL CARHART.

TREASURER,

One Year—A. E. FROST.

CHEMICAL SECTION.

CHAIRMAN,

W. E. KOCH.

VICE CHAIRMAN,

JAS. M. CAMP.

SECRETARY,

ABRAM T. EASTWICK.

ADDITIONAL DIRECTORS,

PROF. F. C. PHILLIPS, JAS. O. HANDY.

STANDING COMMITTEES

COMMITTEE ON LIBRARY,

PROF. F. C. PHILLIPS, Chairman. W. G. WILKINS,
G. KAUFMAN, J. H. EASTWICK, MAURICE COSTEE.

COMMITTEE ON PROGRAMME,

H. J. LEWIS, Chairman, CHAS. F. SCOTT,
EMIL SWENSSON, JNO. W. SEAVER, JAS. O. HANDY.

COMMITTEE ON ROOMS,

THOS. H. JOHNSON, Chairman, C. B. ALBREE,
W. J. PRENTICE, DANIEL ASHWORTH, JAS. M. CAMP.

COMMITTEE ON RECEPTION,

THOS. P. ROBERTS, Chairman, J. A. BRASHEAR, G. H. PAINE,
JNO. M. DEFORTH, F. ENGSTRÖM, KARL F. STAHL, F. Z. SCHELLENBERG

OFFICERS FOR 1893.

PRESIDENT,

One Year—M. J. Becker.

VICE PRESIDENTS,

Two Years—Thos. H. Johnson. One Year—Charles Davis.

DIRECTORS,

Two Years—Walter E. Koch, Two Years—Emil Swensson.
One Year—Robert Munroe, One Year—G. W. G. Ferris.

SECRETARY,

One Year—R. N. Clark.

TREASURER,

One Year—A. E. Frost.

CHEMICAL SECTION.

CHAIRMAN,

One Year—Joseph H. Eastwick.

VICE CHAIRMAN,

One Year—Fred. Crabtree.

SECRETARY,

One Year—James O. Handy.

ADDITIONAL DIRECTORS,

One Year—James Camp, George Faunce.

STANDING COMMITTEES.

COMMITTEE ON LIBRARY,

H. J. Lewis, Chairman. F. C. Phillips,
L. B. Stilwell, J. H. Eastwick, Charles Davis.

COMMITTEE ON PROGRAMME,

W. G. Wilkins, Chairman. J. O. Handy,
W. Lucien Scaife, E. Swensson, James M. Camp.

COMMITTEE ON ROOMS,

R. N. Clark, Chairman. T. P. Roberts,
Thos. H. Johnson, George S. Davison, T. M. Hopke.

COMMITTEE ON RECEPTION,

George S. Davison, Chairman. H. J. Lewis,
F. Engström. G. Kaufman, T. P. Roberts,
J. A. Brashear, James M. Camp.

LIST OF MEMBERS.

Date of Membership.			
Dec.,	'90.	Abbott, W. L.,	Bank of Commerce Bldg., Pittsburg, Pa.
May,	'89.	Aiken, Henry,	508 Lewis Bldg., Pittsburg, Pa.
Oct.,	'85.	Albree, C. B.,	18 Market St., Allegheny, Pa.
June,	'93.	Alexander, Wm. A.,	Wilkinsburg, Pa.
April,	'80.	Amsler, Carl,	Bissel Block, Pittsburg, Pa.
Dec.,	'84.	Anderson, J. W.,	45 Fremont St., Allegheny, Pa.
March,	'92.	Andrews, Ferdin'd,	Mansfield Valley, Pa.
Jan.,	'80.	Armstrong, H. W.,	Verona, Pa.
Jan.,	'87.	Arms, Walter F.,	Helvetia, Clearfield Co., Pa.
Nov.,	'88.	Arras, J. W.,	P. O. Box 485, Pittsburg, Pa.
March,	'92.	Arrott, J. W., Jr.,	Standard Mfg. Co., River Ave., Allegheny, Pa.
April,	'93.	Ashmead, F. M.,	11th and Pike Streets, Pittsburg, Pa.
April,	'90.	Ashworth, Daniel,	108 4th Ave., Pittsburg, Pa.
April,	'91.	Atwood, S. A..	Beaver Falls, Pa.
Feb.,	'82.	Aull, William F.,	66 3d Ave., Pittsburg, Pa.
Sept.,	'87.	Bailey, Chas.,	36th St. and A. V. R. R., Pittsburg, Pa.
Sept.,	'84.	Bailey, Jas. M.,	Sligo Iron Works, Pittsburg, Pa.
June,	'92.	Bailey, Jno. M.,	116 Water St., Pittsburg, Pa.
Feb.,	'94.	Baker, Morris,	Latrobe, Pa.
May,	'84.	Bakewell, Thos. W.	Bakewell Bldg., Pittsburg, Pa.
June,	'88.	Bakewell, Wm.,	110 Diamond St., Pittsburg, Pa.
Feb.,	'92.	Ballard, Walter A.,	Richburg, N. Y.

Date of Membership.		
Dec., '92.	Balzell, Wm. H.,	311 Lewis Blk., Pittsburg, Pa.
April, '88.	Barbour, Geo. H.,	
May, '85.	Barnes, Phineas,	7 Simen Ave., Pittsburg, Pa.
May, '90.	Barret, J. H.,	Keystone Bridge Co., Pittsburg, Pa.
April, '92.	Barrett, J. C.,	Duquesne, Pa.
April, '92.	Barrows, W. A.,	Sharpsville, Pa.
March, '93.	Bartberger, C. M.,	Westinghouse Bldg., Pittsburg, Pa.
Nov., '82.	Bates, Onward,	Rand-McNally Bldg, Chicago, Ill.
April, '92.	Batchelor, E. S.,	Wilkinsburg, Pa.
Nov., '92.	Beazell, Edwin H.,	Keystone Bridge Wks., Pittsburg, Pa.
Jan., '80.	Becker, Max J.,	5525 Ellsworth Ave., E.E., Pittsburg, Pa.
Jan., '85.	Beckfield, Chas.,	Brinton Station, P. R. R.
Dec., '83.	Benney, Jas.,	Emsworth, Pa.
Dec., '92.	Berg, P. F.,	Munhall, Pa.
Feb., '94.	Bergendahl, Hilmar,	Keystone Bridge Co., Pittsburg, Pa.
Jan., '80.	Bigelow, E. M.,	Pittsburg, Pa.
March, '91.	Black, S. W.,	99 4th Ave., Pittsburg, Pa.
Jan., '89.	Blaxter, G. H.,	Allegheny Co. Light Co., Pittsburg, Pa.
March, '84.	Bole, Wm. A.,	25th St. and Liberty Ave., Pittsburg, Pa.
April, '93.	Bowman, F. M.,	Riter & Conley, Allegheny, Pa.
April, '81.	Boyd, Henry E.,	National Tube Works, McKeesport, Pa.
March, '93.	Bradford, Wm.,	142 S. Negley Ave., Pittsburg, Pa.
April, '92.	Brakes, Jas.,	3340 6th Ave., Troy, N. Y.
March, '84.	Brashear, John A.,	Observatory Ave., Allegheny, Pa.

Date of Membership.			
Feb.,	'91.	Branne, J.,	Mt. Vernon Bridge Co., Mt. Vernon, O.
Jan.,	'80.	Browne, Geo. H.,	Westinghouse Bldg., Pittsburg, Pa.
Nov.,	'93.	Brown, Jr., R. K.,	2 Carson St., Pittsburg, Pa.
April,	'93.	Brown, A. F.,	40th Street, Pittsburg, Pa.
Jan.,	'80.	Brown, W. R.,	City Engineer's Office, Pittsburg, Pa.
March,	'93.	Bruce, Jno. M.,	E. E., Pittsburg, Pa.
April,	'82.	Brunot, H. J.,	Greensburg, Pa.
March,	'92.	Brynn, P.,	Shiffler Bridge Co., Pittsburg, Pa.
Jan.,	'87.	Buente, C. F.,	Duquesne Way and 10th St., Pittsburg, Pa.
Jan.,	'80.	Bullock, W. S.,	Taylor & Bullock, Pittsburg, Pa.
Sept.,	'80.	Burger, Rutherford	Kidd Steel Wire Co., Ltd., Sharpsburg, Pa.
Jan.,	'86.	Cadman, A. W.,	63 Water St., Pittsburg, Pa.
May,	'82.	Camp, Jas. M.,	Duquesne, Pa.
Dec.,	'87.	Campbell, Hugh C.,	29 North Ave., Allegheny, Pa.
June,	'92.	Card, W. W.,	Penn and Murtland Aves., Pittsburg, Pa.
Feb.,	'83.	Carhart, Daniel,	Western University, Allegheny, Pa.
May,	'85.	Carlin, Thos. H.,	181 Robinson St., Allegheny, Pa.
Nov.,	'84.	Carlin, David,	West Market St., Allegheny, Pa.
Dec.,	'90.	Carnahan, R. B., Jr.	McKeesport, Pa.
April,	'90.	Carnegie, Andrew,	55 Broadway, New York, N. Y.
Sept.,	'83.	Chambers, J. S., Jr.,	19 Church Ave., Allegheny, Pa.
Feb.,	'80.	Chess, H. B.,	531 Wood St., Pittsburg, Pa.
Nov.,	'82.	Clapp, Geo. H.,	116 Water St., Pittsburg, Pa.

Date of Membership.			
Jan.,	'88.	Clark, R. N.,	Times Bldg., Fourth Ave., Pittsburg, Pa.
April,	'92.	Clifton, Warren R.,	Shenango Valley Steel Co. New Castle, Pa.
Sept.,	'91.	Clugston, W. A.,	531 Wood St., Pittsburg, Pa.
Oct.,	'83.	Coffin, Wm. C., Jr.,	Ingram, Pa.
April,	'87.	Colby, J. A.,	Girard Building, Philadelphia, Pa.
Feb.,	'91.	Comp, C. A.,	Westinghouse Elec. Co., Pittsburg, Pa.
May,	'91.	Connelly, Cliff'd B.,	Western University, Allegheny, Pa.
Feb.,	'81.	Cooper, Chas. A.,	410 Grant St., Pittsburg, Pa.
April,	'92.	Cooper, Frank I.,	Taunton, Mass.
Oct.,	'92.	Corcoran, W. H.,	Howe, Brown & Co., Pittsburg, Pa.
Nov.,	'89.	Cornelius, W. A.,	B. & O. R. R., Hazelwood, Pa.
Oct.,	'92.	Coster, Maurice,	Westinghouse E. & M. Co., Pittsburg, Pa.
April,	'92.	Coster, William H.,	Cor. Penn and 4th St., Pittsburg, Pa.
March,	'92.	Crabtree, Fred.,	Monongahela Furnace Co., McKeesport, Pa.
Sept.,	'80.	Curry, H. M.,	Carnegie Steel Co., Pittsburg, Pa.
April,	'92.	Daly, W. H., M.D.,	6211 Howe St., Pittsburg, Pa.
April,	'92.	Davis, Arthur W.,	116 Water St., Pittsburg, Pa.
Jan.,	'80.	Davis, Charles,	County Eng., Court House, Pittsburg, Pa.
Dec.,	'80.	Davison, Geo. S.,	Westinghouse Building, Pittsburg, Pa.
March,	'92.	Davison, Neville C.,	68 Water St., Pittsburg, Pa.
Feb.,	'91.	Deforth, John M.,	Keystone Bridge Works, Pittsburg, Pa.
Jan.,	'80.	Dempster, Alex.,	40 7th Ave., Pittsburg, Pa.

Date of Membership.			
April,	'92.	Dickson, Jos. H.,	Sharpsville, Pa.
Jan.,	'80.	Diescher, Samuel,	Hamilton Building, Pittsburg, Pa.
Nov.,	'87.	Dobson, Thos. H.,	Penn P. O., Lancaster Co., Pa.
Nov.,	'90.	Doxrud, Peter,	Park Bros, Pittsburg, Pa.
Oct.,	'90.	Dravo, E. T.,	49 Fifth Ave., Pittsburg, Pa.
Jan.,	'92.	Driver, C. M.,	P. O. Box 541, Pittsburg, Pa.
Oct.,	'93.	Drozdov, A. Z.,	141 Henderson Street, Allegheny, Pa.
Dec.,	'92.	Dubbs, Jesse A.,	413 Wood St., Pittsburg, Pa.
March,	'92.	Duckham, A. E.,	232 Rebecca St., E. E., Pittsburg, Pa.
April,	'92.	Dudley, C. B., Ph.D.	Altoona, Pa.
March,	'93.	East, Wm. J.,	Westinghouse Bldg., Pittsburg, Pa.
March,	'92.	Eastwick, J. H.,	130 S. Negley Ave., Pittsburg, Pa.
June,	'92.	Eastwick, A. T.,	130 S. Negley Ave., Pittsburg, Pa.
Jan.,	'81.	Eckert, E. W.,	1313 Monadnock Bldg., Chicago, Ill.
Jan.,	'80.	Edeburn, W. A.,	410 Grant St., Pittsburg, Pa.
March,	'91.	Edwards, J. P.,	Uniontown, Pa.
Jan.,	'80.	Ehlers, Chas.,	Allegheny, Pa.
April,	'92.	Elliott, E. L.,	High School, Pittsburg, Pa.
Jan.,	'92.	Emmons, C. DeM.,	Pacific near Liberty Ave., Pittsburg, Pa.
Feb.,	'88.	Engle, Geo. U.,	281 N. High St., Columbus, O.
Sept.,	'82.	Engström, Franz,	Penna. Co., Pittsburg, Pa.
Feb.,	'88.	Estrada, E. D.,	307 Lewis Block., Pittsburg, Pa.
March,	'93.	Evans Rawdon,	Bank of Commerce Bldg., Pittsburg, Pa.
Feb.,	'92.	Farrar, Chas. J.,	128 Perrysville Ave., Allegheny, Pa.

Date of Membership.		
April, '92.	Faunce, Geo.,	Mansfield Valley, Pa.
March, '86.	Ferris, Geo. W. G.,	P. O. Box 539, Pittsburg, Pa.
Jan., '85.	Fitler, F. K.,	121 Water St., Pittsburg, Pa.
April, '89.	Fleming, H. S.,	Manuf. Record Bldg., Baltimore, Md.
March, '92.	Floyd, Jno.,	385 Wylie Ave., Pittsburg, Pa.
Jan., '87.	Follansbee, Gilb'rt,	Supt. Chamber of Com., Pittsburg, Pa.
March, '92.	Ford, S. A.,	Kenmawr Hotel, E. E., Pittsburg, Pa.
April, '91.	Forter, S.,	Lewis Block, Room 307, Pittsburg, Pa.
Feb., '82.	Frank, Isaac W.,	54th St. and A. V. R. R., Pittsburg, Pa.
April, '93.	Friend, Chas. W.,	14 Lincoln Ave., Allegheny, Pa.
May, '92.	Froenheiser, Jas J.,	Cambria Iron Works, Johnstown, Pa.
Jan., '80.	Frost, A. E.,	Perrysville Ave., Allegheny, Pa.
April, '88.	Fulton, Louis B.,	34 Penn Ave., Pittsburg, Pa.
April, '90.	Giles, W. A.,	Lewis Blk., Pittsburg, Pa.
Oct., '83.	Glafey, Fred'k A.,	Carnegie Steel Co., Pittsburg, Pa.
March, '92.	Glass, G. G.,	La Belle Steel Works, Allegheny, Pa.
Feb., '80.	Goodyear, S. W.,	Waterbury, Conn.
Feb., '94.	Grafton, Wm. McC.,	Penn. Co's. Bldg., Penn Ave., Pittsburg, Pa.
May, '92.	Graham, Neville B.,	Duquesne, Pa.
June, '85.	Grant, Horace E.,	119 First Ave., Pittsburg, Pa.
Oct., '92.	Greenwood, G. F.,	Gen'l Mgr. P.&A. Traction Co, Allegheny, Pa.
April, '85.	Griffen, A. L.,	Carnegie Steel Co., Pittsburg, Pa.

Date of Membership.		
Jan., '92.	Griffen, Francis A.,	319 S. Highland Ave., Pittsburg, Pa.
Sept., '82.	Gwinner, Fred., Jr.	Allegheny, Pa.
March, '83.	Hackett, Geo. W.,	1009 Liberty St., Pittsburg, Pa.
Sept., '93.	Hagan, F. G.,	166 Home St., Pittsburg, Pa.
Dec., '90.	Hall, Chas. M.,	116 Water St., Pittsburg, Pa.
March, '92.	Hall, J. G.,	Penna. Salt Works, Natrona, Pa.
Feb., '91.	Hallgren, Emil,	Johnson Co., Johnstown, Pa.
Oct., '89.	Handy, J. O.,	116 Water St., Pittsburg, Pa.
Feb., '91.	Hardie, J. B.,	Keystone Bridge Works, Pittsburg, Pa.
April, '81.	Harlow, Geo. R.,	Wilkinsburg, Pa.
Jan., '80.	Harlow, Jas. H.,	Wilkinsburg, Pa.
Nov., '92.	Harkins, J.,	Millvale Ave., Pittsburg, Pa.
March, '92.	Harrison, A. B.,	7 LaBelle St., Pittsburg, Pa.
March, '93.	Hart, Chas.,	Braddock, Pa.
Nov., '91.	Hartrick, R. S. D.,	134 Water St., Pittsburg, Pa.
April, '92.	Harvey, John L.,	Park Bros. & Co., Pittsburg, Pa.
Nov., '92.	Hatch, Fred. T.,	Mansfield Valley, Pa.
Feb. '93.	Hays, Jos. A.,	147 S. 18th St., Pittsburg, Pa.
Oct., '92.	Hays, Wm. H.,	32d and Smallman Sts., Pittsburg, Pa.
Jan., '80.	Hemphill, Jas.,	Mackintosh, Hemphill & Co., Pittsburg, Pa.
April, '93.	Henry, Wm. D.,	500 Bedford Ave., Pittsburg, Pa.
Nov., '85.	Heron, Fred.,	Supt. Phœnix Iron Wks., Phœnixville, Pa.
Oct., '92.	Herron, W. A.,	80 4th Ave., Pittsburg, Pa.
Jan., '86.	Hetzel, Jas.,	60 4th Ave., Pittsburg, Pa.
April, '87.	Hibbard, H. D.,	High Bridge, N. J.
Nov., '88.	Hoag, I. V., Jr.,	U. S. Asst. Engineer, Frankfort, Ky.

Date of Membership.		
April, '80.	Hoffstot, Frank N.,	Water St., Pittsburg, Pa.
Sept., '88.	Hohl, L. I.,	100 Boggs Ave., Pittsburg, Pa.
May, '92.	Holbrook, E.,	Supt. B. & O. R. R., Pittsburg, Pa.
Dec., '88.	Holland, W. J.,	Fifth Ave., Oakland, Pittsburg, Pa.
April, '92.	Hope, Jas. A. P.,	E. Winter Co., Herr's Island, Allegheny Co., Pa.
Nov., '87.	Hopke, T. M.,	Pittsburg Reduction Co., New Kensington, Pa.
March, '92.	House, Frank E.,	P. & L. E. R. R., Beaver, Pa.
Oct., '88.	Howe, H. M.,	287 Marlborough St., Boston, Mass.
Oct., '81.	Hunt, A. E.,	116 Water St., Pittsburg, Pa.
Jan., '89.	Hunt, H. E.,	Emerson St., E. E., Pittsburg, Pa.
June, '93.	Hussey, C. G.,	64 4th Ave., Pittsburg, Pa.
Oct., '90.	Hutchins'n, Geo.H.	Ft. Worth, Texas.
Oct., '87.	Hyde, C.,	Room 902, Lewis Block, Pittsburg, Pa.
Dec., '92.	Jackson, Walter H.	Schoen Mfg. Co., Allegheny, Pa.
Sept., '93.	Jamison, W. W.,	Greensburg, Pa.
March, '80.	Jarboe, W. S.,	Room 69, Schmidt Bldg., Pittsburg, Pa.
Dec., '88.	Jenkins, J. B.,	Duquesne Ave., Allegheny.
Feb., '81.	Jennings, B. F.,	Preble Ave., Allegheny, Pa.
Sept., '93.	Johnson, Chas.,	4124 Butler St., Pittsburg, Pa.
Jan., '88.	Johnson, Thos. H.,	Penna. Lines, 10th & Penn Sts. Pittsburg, Pa.
April, '92.	Johnson, C. M.,	Box 101, Avalon, Pa.
May, '92.	Johnston, J. P.,	30 Cortland St., N. Y.
March, '92.	Johnston, Robt. G.,	Edith Furnace Co., Allegheny, Pa.

Date of Membership.			
Feb.,	'92.	Johnson, S. H.,	257 Fisk St. Pittsburg, Pa.
April,	'81.	Jones, B. F.,	Jones & Laughlin, Ltd., Pittsburg, Pa.
March,	'88.	Jones, W. Larimer,	Jones & Laughlin, Ltd., Pittsburg, Pa.
Feb.,	'92.	Jordan, L. E.,	Bellevue, Pa.
Dec.,	'91.	Kane, Cornelius,	Duquesne Way and Cecil Ave., Pittsburg, Pa.
Nov.,	'80.	Kaufman, Gustave,	813 Hamilton Building, Pittsburg, Pa.
May,	'80.	Kay, J. C.,	Kay Bros. & Co., Water St., Pittsburg, Pa.
Feb.,	'85.	Kay, Jas. I.,	96 Diamond St., Pittsburg, Pa.
Sept.,	'92.	Keeler, Jas. E.,	Observatory, Allegheny, Pa.
March,	'85.	Kelly, J. A.,	28th and Smallman Sts., Pittsburg, Pa.
Jan.,	'85.	Kelly, J. W.,	Box 196, New Brighton, Pa.
Oct.,	'91.	Kelly, M. B.,	61 Wylie Ave., Pittsburg, Pa.
April,	'92.	Kemery, Philo,	Crescent Steel Works, Pittsburg, Pa.
Feb.,	'91.	Kemler, W. H.,	Ashland, Ky.
May,	'86.	Kennedy, Julian,	Room 38, 103 4th Ave., Pittsburg, Pa.
Sept.,	'93.	Kenyon, E. H.,	307 Lewis Block, Pittsburg, Pa.
Sept.,	'82.	Kenyon, L. H.,	Pittsburg Locomotive Wks., Allegheny, Pa.
March,	'89.	Kerr, A. C.,	Pittsburg, Pa.
June,	'88.	Kimball, Frank I.,	Greensburg, Pa.
Feb.,	'82.	King, T. M.,	B. & O. R. R., Baltimore, Md.
April,	'92.	Kirby, G. G.,	Eliza Furnace Co., Pittsburg, Pa.
March,	'82.	Kirk, Arthur,	Sharpsburg, Pa.
Nov.,	'87.	Kirtland, A. P.,	215 Craig St., Pittsburg, Pa.
April,	'87.	Klages, Geo. W.,	130 S. 11th St., Pittsburg, Pa.

Date of Membership.		
Dec., '92.	Klindworth, J. L.,	239 Chartiers St., Allegheny, Pa.
April, '87.	Koch, Walter E.,	Sharpsburg, Pa.
March, '92.	Kuntz, J. F.,	Wilkins & Davison, Pittsburg, Pa.
Feb., '92.	Lamb, Geo.,	23 Union Ave., Allegheny, Pa.
Nov., '88.	Langley, J. W.,	845½ Fairmount St., Cleveland, O.
Oct., '92.	Lash, Horace W.,	Carbon St'l Co., Pittsburg, Pa.
May, '85.	Lauder, Geo.,	48 5th Ave., Pittsburg, Pa.
Feb. '93.	Laughlin, Alex.	Lewis Block, Pittsburg, Pa.
April, '84.	Leishman, J. A. G.	42 5th Ave., Pittsburg, Pa.
May, '80.	Leschorn, Alex.,	Phoenix Bridge Co., Phoenixville, Pa.
March, '80.	Lewis, John L.,	Lewis Foundry and Machine Co., Ltd., Pittsburg, Pa.
May, '90.	Lewis, Harry J.,	Times Building, Pittsburg, Pa.
Sept., '93.	Lidbeck, Carl G.,	Wilmerding, Pa.
Feb., '92.	Liggett, Dudley S.,	Box 915, Alliance O.
Feb., '82.	Lindenthal, Gustav,	45 Cedar Street, New York, N. Y.
Sept., '84.	Lloyd, Henry,	Lewis Block, Pittsburg, Pa.
Nov., '90.	Lobingier, J. E.,	254 S. Euclid Ave., Pittsburg, Pa.
April, '92.	Loeffler, Geo. O.,	153 Pearl St., Pittsburg, Pa.
May, '93.	Ludin Carl,	Braddock, Pa.
Sept., '90.	Ludwig, Jos.,	525 State St., Schenectady, N. Y.
March, '93.	Lynne, Mary L.,	Selwyn St. and Elysian Ave., Pittsburg, Pa.
March, '92.	Lyons, Jas. K.,	Pittsburg Bridge Co., Pittsburg, Pa.
March, '92.	Luty, B. E. V.,	Observatory Hill, Allegheny, Pa.

Date of Membership.			
Jan.,	'80.	Macbeth, Geo. A.,	Keystone Flint Glass Co., Pittsburg, Pa.
Dec.,	'92.	MacDonald, W. R.,	6 S. Diamond Street, Allegheny, Pa.
Dec.,	'91.	Macfarren, S. J.,	413 Lewis Bl'k, Pittsburg, Pa.
Nov.,	'92.	Mackenzie, Jas.,	Carnegie Steel Co., Pittsburg, Pa.
April,	'81.	Malone, M. L.,	320 5th Ave., Pittsburg, Pa.
Jan.,	'80.	Martin, Wm.,	P. O. Box 670, Pittsburg, Pa.
April,	'92.	Manby, Chas. E.,	532 Shaw's Ave., McKeesport, Pa.
March,	'92.	Manning, W. T.,	B. & O. R. R., Baltimore, Md.
April,	'92.	Marsh, Geo. A.,	Mansfield Valley, Pa.
Dec.,	'83.	Mead, Edward,	P. O. Box 548, Louisville, Ky.
Feb.,	'91.	Means, E. C.,	Westinghouse Electric Co., Pittsburg, Pa.
Dec.,	'92.	Menough, H. S.,	West Penn Steel Works, Allegheny, Pa.
Sept.,	'90.	Mercader, Camille,	Edgar Thomson Steel Wks., Braddock, Pa.
March,	'88.	Mesta, Geo.,	Lewis Block, Room 512, Pittsburg, Pa.
Jan.,	'80.	Metcalf, Wm.,	136 1st Ave., Pittsburg, Pa.
Jan.,	'84.	Meyran, L. A.,	Germania Bank Bldg., Pittsburg, Pa.
March,	'93.	Michie, W. R.,	Box 11, Wall's Station, Pa.
Feb.,	'82.	Milholland, J. B.,	5th Ave. and Tunnel St., Pittsburg, Pa.
March,	'93.	Miller, H. B.,	Duquesne Steel Works, Duquesne, Pa.
Sept.,	'92.	Miller, Reuben, Jr.	Crescent Steel Works, Pittsburg, Pa.
Jan.,	'80.	Miller, Reuben,	136 1st Ave., Pittsburg, Pa.
May,	'85.	Miller, Wilson,	18 Lincoln Av. Allegheny, Pa.
Oct.,	'80.	Milliken, A. C.,	Pottsville Iron and Steel Co., Pottsville, Pa.

Date of Membership.		
April, '92.	Mixer, Chas. T.,	600 E. High Street, Ishpeming, Mich.
Sept., '93.	Moldinke, R. G. G.,	164 Home St., Pittsburg, Pa.
March, '92.	Mollenauer, F. H.,	Castle Shannon, Pa.
April, '92.	Mohr, Jacob A.,	Oliver Iron and Steel Co., Pittsburg, Pa.
March, '92.	Moorhead, J. K.,	2d Ave. and Brady St., Pittsburg, Pa.
April, '81.	Moorhead, M. K.,	Moorhead-McClean Co., Pittsburg, Pa.
April, '90.	Morgan, Wm.,	Highland and Center Ave., Pittsburg, Pa.
Oct., '86.	Morris, G. W.,	P. O. Box 656, Pittsburg, Pa.
Jan., '90.	Morris, A. Saunders	Westinghouse Electric Co., Pittsburg, Pa.
April, '93.	Morrison, Thos.,	Duquesne, Pa.
March, '90.	Mueller, Gustave,	36 Morgan St., Allegheny, Pa.
April, '80.	Munro, Robert,	23d and Smallman Sts., Pittsburg, Pa.
March, '93.	Murray, Chas. B.,	Edgar Thomson Steel Works, Braddock, Pa.
March, '92.	Murray, J. P.,	Perrysville Ave., Allegheny, Pa.
Sept., '92.	Muse, W. G.,	West Newton, Pa.
April, '92.	Myers, Uriah H.,	Jefferson Iron Wks., Steubenville, O.
March, '80.	McCandless, E. V.,	209 Wood St., Pittsburg, Pa.
Jan., '91.	McClintock, H. P.,	South Ave. and Snowden St., Allegheny, Pa.
Oct., '92.	McClintic, H. H.,	220 Main St., Pittsburg, Pa.
May, '85.	McConnell, Jno. A.	87 Water St., Pittsburg, Pa.
March, '81.	McCulley, R. L.,	161 5th Ave., Pittsburg, Pa.
Feb., '81.	McCune, John D.,	98 4th Ave., Pittsburg, Pa.
May, '89.	McDonald, John,	239 44th St., Pittsburg, Pa.
Dec., '89.	McDonald, C. I.,	143 Fayette St., Allegheny, Pa.

Date of Membership.		
March, '93.	McDonald Thos.,	Youngstown, O.
April, '87.	McDowell, James,	Observatory Ave., Allegheny, Pa.
Oct., '90.	McFarland, N. J.,	Care W. J. Haines & Co., 907 Filbert St., Philadelphia.
March, '92.	McGary, Daniel,	Care of Painter & Sons Co., Pittsburg, Pa.
Jan., '91.	McKaig, Thos. B.,	Ferguson Bldg., Pittsburg, Pa.
March, '92.	McKelvy, J. P.,	Mackintosh, Hemphill & Co., Pittsburg, Pa.
April, '92.	McKenna, Alex. G.	6936 Hamilton Ave., Pittsburg, Pa.
Sept., '80.	McKinney, J. P.,	141 Fayette St., Allegheny, Pa.
Feb., '82.	McMurtry, G. G.,	P. O. Box 960, Pittsburg, Pa.
Feb., '85.	McQuiston, Jas.,	26th and Railroad Sts., Pittsburg, Pa.
March, '81.	McRoberts, J. H.,	400 Grant St., Pittsburg, Pa.
Jan., '80.	Naegeley, John,	311 Hamilton Bldg., Pittsburg, Pa.
Dec., '92.	Neale, John C.,	39 Cortland St., near York.
Jan., '86.	Nevins, Rich'd, Jr.,	Seattle, Washington.
Nov., '91.	Nichols, Chas. H.,	39 Cortland St., New York, N. Y.
Jan., '81.	Nichols, T. B.,	223 Allegheny Ave., Allegheny, Pa.
March, '92.	Nicholson, J. H.,	88 Penna. Av., Allegheny, Pa.
April, '80.	Nimick, F. B.,	Singer, Nimick & Co., Ltd., Pittsburg, Pa.
Feb., '82.	Noble, Patrick,	200 Market Street, San Francisco, Cal.
Nov., '92.	Nurich, Alex.,	243 Fisk St., Pittsburg, Pa.
Nov., '92.	Oakley, Frank T.,	Mt. Vernon Bridge Works, Mt. Vernon, O.
March, '92.	Opsion, Ole C.,	Shiffler Bridge Co., Pittsburg, Pa.

Date of Membership.		
Feb., '94.	Otterstedde, Chas.,	Keystone Bridge Co., Pittsburg, Pa.
Feb., '83.	Paddock, Jos. H.,	Connellsville, Pa.
Nov., '92.	Page, Geo. S.,	Park Bros. & Co., Pittsburg, Pa.
May, '89.	Paine, G. H.,	Swissvale, Pa.
March, '84.	Painter, Park,	J. Painter, Sons & Co., Pittsburg, Pa.
Nov., '88.	Palmer, W. P.,	37 Beech St., Allegheny, Pa.
Jan., '80.	Parkin, Chas.,	Parnassus, Pa.
April, '84.	Parkin, Walter F.,	136 1st Ave., Pittsburg, Pa.
Dec., '91.	Parsons, B. H.,	Pittsburg Bridge Co., Pittsburg, Pa.
March, '92.	Patterson, P. C.,	McKeesport, Pa.
Feb., '81.	Patterson, Peter,	National Tube Works, McKeesport, Pa.
Nov., '81.	Paul, J. W.,	Verona Tool Wks., 7th Ave. & Liberty St., Pittsburg, Pa.
April, '92.	Pease, F. N.,	P. R. R., Altoona, Pa.
Sept., '83.	Peebles, Andrew,	Schmidt & Friday Bldg., Pittsburg, Pa.
Jan., '80.	Phillips, F. C.,	59 Sherman Av., All'gh'ny, Pa.
Jan., '83.	Phipps, Henry, Jr.,	Carnegie, Phipps & Co., Ltd., Pittsburg, Pa.
March, '92.	Pierce, Chas. J.,	Western Tube Co., Kewanee, Ill.
Oct., '93.	de Pontois, Leon,	Westinghouse E. & M. Co., Pittsburg, Pa.
Dec., '81.	Porter, John C.,	Spang Steel and Iron Co., Pittsburg, Pa.
May, '87.	Porter, John E.,	Penn Ave. and 2d St., Pittsburg, Pa.
Jan., '83.	Prentice, W. J.,	1009 Liberty Street, Pittsburg, Pa.
Nov., '92.	Probert, R. H.,	269 Main St., Pittsburg, Pa.
Dec., '88.	Purves, Jas.,	Pineville, Ky.

Date of Membership.			
Jan.,	'80.	Quincy, Walter C.,	3d Ave. and Try Street, Pittsburg, Pa.
March,	'81.	Ramsey, Jos., Jr.,	Mang. St. L. Bridge & T. R. R., St. Louis, Mo.
Dec.,	'90.	Randolf, Alfred,	53 Carson St. Pittsburg, Pa.
June,	'93.	Reed, Hugh A.,	212 Lacock St., Allegheny, Pa.
Jan.,	'80.	Reed, Jas.,	West Penn. R. R., Allegheny, Pa.
Dec.,	'89.	Reed, J. R.,	150 Fayette Street, Allegheny, Pa.
Jan.,	'80.	Rees, Thos. M.,	J. Rees & Sons, Pittsburg, Pa.
June,	'88.	Reinman, A. L.,	45 Linden Street, Brooklyn, N. Y.
May,	'83.	Reno, Geo. E.,	90 4th Ave., Pittsburg, Pa.
Jan.,	'80.	Rhodes, Joshua,	Penna. Tube Works, Pittsburg, Pa.
Oct.	'91.	Richards, G. T.,	Singer Bld., Pittsburg, Pa.
Jan.,	'80.	Ricketson, John H.	10 Wood St., Pittsburg, Pa.
Jan.,	'92.	Riddle, Walter,	287 Ridge Ave., Allegheny, Pa.
April,	'87.	Rider, Percy S.,	6 9th St., Pittsburg, Pa.
Jan.,	'88.	Robbins, F. L.,	Penn Bldg., Pittsburg, Pa.
Jan.,	'80.	Roberts, Thos. P.,	Craig St., N. of Centre Ave., Pittsburg, Pa.
Jan.,	'80.	Rodd, Thos.,	Penna. Co., Pittsburg, Pa.
April,	'92.	Ross, F. G.,	153 Forbes Avenue, Pittsburg, Pa.
Nov.,	'92.	Rousseau, H. H.,	Pittsburg Bridge Co., Pittsburg, Pa.
Nov.,	'89.	Ruhe, C. H. W.,	1423 Bluff St., Pittsburg, Pa.
Jan.,	'88.	Rund, Edwin,	Fuel-Gas and Mfg. Co., Brin-Sta., P. R. R., Pittsburg, Pa.
May,	'91.	Sawyer, Thos. I. J.,	Box 507, Pittsburg, Pa.
April,	'84.	Scaife, O. P.,	119 1st Ave., Pittsburg, Pa.
March,	'83.	Scaife, W. Lucien,	28th and Smallman Sts., Pittsburg, Pa.

Date of Membership.		
Sept., '87.	Scaife, W. Marcelin,	336 Ridge Ave., Allegheny, Pa.
Feb., '82.	Schellenberg, F.Z.,	159 1st Ave., Pittsburg, Pa.
Jan., '80.	Schinneller, Jacob,	Room 31, McClintock Blk., Pittsburg, Pa.
Feb.. '85.	Schmid, Albert,	Westinghouse E. & M. Co., Pittsburg, Pa.
May, '83.	Schook, Levi,	1st Ave. and Ferry St., Pittsburg, Pa.
Feb., '94.	Schoyer, A. M.,	Library Place, Allegheny, Pa.
March, '92.	Schluederberg, G. W.	374 Ridge Ave., Allegheny, Pa.
Sept., '92.	Schade, C. G.,	142 43d St., Pittsburg, Pa.
Feb., '92.	Scott, Jas.,	Lucy Furnace Co., Pittsburg, Pa.
Sept., '82.	Schultz, C. J.,	Iron City Bridge Works, Pittsburg, Pa.
Nov., '81.	Schwartz, F. H.,	5000 Liberty Avenue, Pittsburg, Pa.
March, '84.	Schwartz, J. E.,	61 4th Ave., Pittsburg, Pa.
April, '90.	Scott, Chas. F.,	Westinghouse E. & M. Co., Pittsburg, Pa.
Feb., '91.	Scott, Ernest K.,	Keystone Bridge Works, Pittsburg, Pa.
Jan., '83.	Seaver, J. W.,	60 Cedar Ave., Allegheny, Pa.
Jan., '89.	Shaw, A. G.,	County Eng. Office, Pittsburg, Pa.
Jan., '89.	Shaw, W. W.,	County Engineer's Office, Pittsburg, Pa.
May, '93.	Shield, James W.,	307 Lewis Block, Pittsburg, Pa.
Nov., '85.	Schultz, O. G.,	Box 65, McKee's Rocks, Pa.
Sept., '80.	Singer, Harton G.,	83 Water St., Pittsburg, Pa.
May, '90.	Singer, R. R.,	111 4th Ave., Pittsburg, Pa.
Sept., '80.	Singer, W. H.,	Singer, Nimick & Co., Ltd., Pittsburg, Pa.

Date of Membership.		
April, '92.	Slocum, F. S.,	Care Jones & Laughlins, Ltd., Pittsburg, Pa.
March, '93.	Smiley, W. P.,	Factoryville, Pa.
Jan., '90.	Smith, F. S.,	Westinghouse Electric Co., Pittsburg, Pa.
Oct., '92.	Snyder, Chris. H.,	Keystone Bridge Works, Pittsburg, Pa.
Feb., '80.	Snyder, Antes,	Eng. Right of Way, P. R. R., Blairsville, Pa.
April, '84.	Snyder, W. P.,	German Nat. Bk. Bldg., Pittsburg, Pa.
May, '81.	Stafford, C. E.,	Shoenberger & Co., Pittsburg, Pa.
April, '93.	Stafford Samuel G.,	516 Market St., Pittsburg, Pa.
May, '83.	Stevenson, D. A.,	Room 6, Union Station, Pittsburg, Pa.
Jan., '86.	Stevenson, Wm. S.,	Fairmount, W. Va.
April, '92.	Stahl, Karl F.,	57th St. and A. V. R. R., Pittsburg, Pa.
Nov., '82.	Stewart, Geo. R.,	100 Wood St., Pittsburg, Pa.
Oct., '86.	Stewart, J. H.,	F. F. Vandervort & Co., Lewis Blk., Pittsburg, Pa.
Jan., '80.	Stillburg, J. H.,	20 5th Ave., Pittsburg, Pa.
Jan., '90.	Stillwell, L. B.,	Westinghouse Electric Co., Pittsburg, Pa.
Jan., '80.	Strobel, C. L.,	Home Insurance Bldg., Chicago, Ill.
Feb., '91.	Stupakoff, S. H.,	U. S. & S. Co., Swissvale, Pa.
Nov., '91.	Sugden, C. H.,	221 40th St., Pittsburg, Pa.
Feb., '83.	Swan, Robert,	39 North Av., Allegheny, Pa.
April, '87.	Swensson, Emil,	Keystone Bridge Works, Pittsburg, Pa.
March, '92.	Sivertsen, O.,	Pittsburg, Pa.
Dec., '92.	Sutton, Stansbury,	284 Ridge Avenue, Allegheny, Pa.
Oct., '91.	Tallman, F. G.,	108 4th Ave., Pittsburg, Pa.

Date of Membership.		
April, '80.	Taylor, E. B.,	1003 Penn Av., Pittsburg, Pa.
Feb., '84.	Taylor, B. H.,	Edgar Thomson Steel Works, Braddock, Pa.
March, '92.	Taylor, Selwyn M.,	420 Bissel Block, Pittsburg, Pa.
Dec., '90.	Temple, W. C.,	408 Lewis Blk, Pittsburg, Pa.
May, '86.	Tener, Geo. E.,	Edith Furnace Co., Allegheny, Pa.
April, '92.	Thomas, Wm. A.,	Thomas Furnace Co., Niles, Ohio.
April, '89.	Thorsell, J. A.,	119 1st Ave., Pittsburg, Pa.
April, '91.	Tebbetts, C. H.,	68 6th Ave., Pittsburg, Pa.
March, '92.	Townsend, Chas. W.	81 Westinghouse Building, Pittsburg, Pa.
March, '91.	Tone, S. LaRue,	108 4th Ave., Pittsburg, Pa.
Dec., '90.	Tonnelé, Theo.,	McKeesport, Pa.
Jan., '80.	Trimble, Robert,	Penna. Co., Pittsburg, Pa.
Dec., '92.	Thomson, F. DuP.,	Box 524, Wilkinsburg, Pa.
Sept., '93.	Turner, C. A. P.,	147 44th St., Pittsburg, Pa.
May, '93.	Urquhart, Geo. C.,	1003 Penn Ave., Pittsburg, Pa.
Feb., '81.	Utley, Edwd. H.,	48 5th Ave., Pittsburg, Pa.
Feb., '92.	Vandivort, Theo.,	Blairsville, Pa.
June, '93.	Veeder, Herman,	Box 953, Pittsburg, Pa.
May, '85.	Verner, M. S.,	Supt. Citizens' Traction Co., Room 808 Penn Bldg., Pittsburg, Pa.
Dec., '92.	Vierheller, Ph.,	Keystone Bridge Works, Pittsburg, Pa.
April, '92.	Voorhees, Saml. S.,	Altoona, Pa.
Dec., '92.	VanMarken, J. C.,	116 Water St., Pittsburg, Pa.
April, '93.	Wagner, Karl von,	McKee's Rocks, Pa.
April, '82.	Wainwright, J.,	111 4th Ave., Pittsburg, Pa.
Jan., '80.	Walker, J. W.,	240 44th St., Pittsburg, Pa.
Dec., '91.	Walker, Robt. L.,	Room 317, Lewis Blk., Pittsburg, Pa.

Date of Membership.		
May, '92.	Walker, Hepburn,	22d and Railroad Sts., Pittsburg, Pa.
Jan., '83.	Warden, C. F.,	7 Shetland Ave., Pittsburg, Pa.
Nov., '91.	Warrington, H. E.	C. N. &. T. P. Ry., Cincinnati, O.
March, '93.	Webb, Eli,	Eliza Fce. Co., Pittsburg, Pa.
March, '92.	Weed, Henry T.,	82 Robinson Street, Allegheny, Pa.
Jan., '80.	Weeks, Jos. D.,	Box 1547, Pittsburg, Pa.
April, '87.	Weiskopf, S. C.,	46 Wall St., New York.
April, '92.	Wendt, E. F.,	P. & L. E. R. R., New Brighton, Pa.
May, '83.	White, T. S.,	Beaver Falls, Pa.
May, '92.	White, F. L.,	151 43d St., Pittsburg, Pa.
Dec., '92.	White, Wm., Jr.,	Times Bldg., Pittsburg, Pa.
March, '92.	Whitman, Ph. R.,	215 Emerson Street., Pittsburg, Pa.
May, '80.	Wickersham, S. M.,	Home St., Allegheny, Pa.
Oct., '90.	Wieland, C. F.,	Bignall & Keeler Mfg. Co., St. Louis, Mo.
May, '86.	Wierman, Victor,	Eng. Pgh. Div. P. R. R., Pittsburg, Pa.
Feb., '80.	Wightman, D. A.,	154 Locust Street, Allegheny, Pa.
Jan., '94.	Wilcox, Frank,	McGill, Wilcox & Co., Pittsburg, Pa.
Jan., '80.	Wilcox, John F.,	Lewis Block, Pittsburg, Pa.
Feb. '93.	Wilkins, Alb. D.,	Bellevue P. O., Pa.
May, '87.	Wilkins, W. G.,	Westinghouse Building, Pittsburg, Pa.
April, '93.	Williams, Chauncey G.,	11th and Pike Streets, Pittsburg, Pa.
April, '92.	Williams, John E.,	Mansfield Valley, Pa.
April, '92.	Williams, Fred. H.,	Riverside Iron Works, Wheeling, W. Va.

Date of Membership.			
Jan.,	'86.	Wilson, H. M.,	Grant Ave., Allegheny, Pa.
Jan.,	'88.	Wilson, F. T.,	Jersey Shore, Lycoming Co., O.
Jan.,	'88.	Wilson, W. R.,	319 Lewis Block, Pittsburg, Pa.
April,	'92.	Wilson, Jos. M.,	N. 3d St., Steubenville, O.
Feb.,	'94.	Wilkins, E. M.,	McKeesport, Pa.
Feb.,	'88.	Winn, Isaac,	National Rolling Mill, McKeesport, Pa.
Jan.,	'80.	Witherow, J. P.,	Lewis Block, Pittsburg, Pa.
Sept.,	'80.	Wood, Richard G.,	McKeesport, Pa.
Jan.,	'88.	Wood, Jos.,	Genl. Manager Pa. Lines, 1003 Penn Ave., Pittsburg, Pa.
April,	'92.	Wood, E. F.,	Munhall, Pa.
Jan.,	'88.	Woods, Leonard G.,	East End Hotel, Pittsburg, Pa.
Jan.,	'80.	Zimmerman, W. F.	U. S. Electric Company, Newark, N. J.

EXCHANGES.

Academy of Natural Sciences, Philadelphia, Pa.
American Contractor, Chicago, Ill.
American Engineer, 47 Cedar Steet, New York.
American Institute Electrical Engineers,
5 Beekman St., New York.
American Institute of Mining Engineers,
Lock Box 223, New York.
American Journal of Railway Appliances,
113 Liberty St., New York.
American Society of Civil Engineers,
127 East 23d St., New York.
American Society of Mechanical Engineers,
60 Madison Ave., New York.
Anales de la Sociedad Cientifica, Argentina.
Associadad dos Engenheiros Civis Portuguezos,
Lisboa, Portuguezos.
Associated Engineers of Virginia,
Room 10, Terry Building, Roanoke, Va.
Association des Ingenieurs, Ecole Speciale,
Rue Plateau, Gand. (Belgium).
Association of Provincial Land Surveyors, Toronto, Canada.
Boston Society of Engineers, City Hall, Boston, Mass.
Bureau of Education, Washington, D. C.
California State Mining Bureau. Stockton, Cal.
Canadian Society of C. E., 112 Mansfield St., Montreal, Canada.
Civil Engineers' Club of Cleveland, Cleveland, O.
Club de Engenharia, Rio de Janeiro, Brazil, S. A.
Colorado Scientific Society, Denver, Colorado.
Conn. Assoc. of Civil Engineers & Surveyors, Birmingham, Conn.

Cunningham, E. S. Columbia, Boone Co., Mo.
Drown, T. M., M.D., Mass. Inst. of Technology, Boston, Mass.
École d'Application du Genie Maritime, Paris, France.
Electrical Engineering, 565 "The Rookery," Chicago, Ill.
Engineering and Mining Journal, 27 Park Place, New York.
Engineers' Club, Kansas City, Mo.
Engineers' Club of Cincinnati, Cincinnati, O.
Engineers' Club of St. Louis, St. Louis, Mo.
Engineers' Club of Philadelphia,
1122 Girard St., Philadelphia, Pa.
Engineers' Club, per Col. John McLeod, Louisville, Ky.
Engineering Association of the South, Nashville, Tenn.
Engineering Department, Vanderbilt University, Nashville, Tenn.
Engineering Review, London, Eng.
E. Ingeniero Civil,
424 Corrientes, Buenos Aires, Argentine Republic, S. A.
Engineering Mechanics, 430 Walnut St., Philadelphia, Pa.
Engineering News, Tribune Building, New York.
Engineering Record, 277 Pearl St., New York.
Fairchild, D. G., Department of Agriculture, Washington, D. C.
Franklin Institute, 18 S. Seventh St., Philadelphia, Pa.
Gordon, Henry A., Inspecting Engineer,
Wellington, New Zealand.
Howe, M. H., Prof., Dept. of C. E., Rose Polytech. Institute,
Terre Haute, Indiana.
Indiana Society of Civil Engineers and Surveyors,
Remington, Ind.
Institution of Civil Engineering,
25 Great George St., Westminster, London, S. W.
Iowa Society of Engineers and Surveyors, Glenwood, Iowa.
Iron Age, 98 Reade St., New York.
Iron and Steel Institute, Victoria Mansions,
Victoria St., London, E. C.
Johnson, J. B., Index Dept. Jour. Ass. Eng. Society,
Washington University, St. Louis, Mo.
Journal of Association of Engineering Societies,
73 Broadway, New York.

Journal of Society of Arts, John St., Adelphi, London, S. W.
Library of Pennsylvania Railroad, Altoona, Pa.
Library of Second Geological Survey of Pennsylvania,
P. O. Bldg., 4th floor, Room 18, Philadelphia, Pa.
Liverpool Engineering Society,
Colquit St., Liverpool, England.
London Patent Office, London, England.
Manufacturers' Record, Baltimore, Md.
Massachusetts Institute of Technology,
Department of Civil Engineering, Boston, Mass.
Mendenhall, T. C., U. S. Coast Survey Office, Washington, D. C.
Merriman, Mansfield, Prof., Dept. C. E.,
Lehigh University, S. Bethlehem, Pa.
Michigan Engineering Society, Climax, Mich.
Mineral Products of the United States,
Department of the Interior, Washington, D. C.
National Car Builder, 140 Nassau St., New York.
Ohio Society of Surveyors and Civil Engineers,
Charles A. Judson, Secretary, Sandusky, O.
Paving and Municipal Engineering, Indianapolis, Ind.
Railway Age, Chicago, Ill.
Railroad and Engineering Journal, 46 Broadway, New York.
Railway Review, Chicago, Ill.
Rensselaer Society of Engineering, Troy, N. Y.
Revista Obras Publicas e Minas. Lisbon, Portugal.
Roadmaster & Foreman, Chicago, Ill.
Science Club of Portland, Portland, Oregon.
Sibley College, Cornell University, Ithaca, N. Y.
Smithsonian Institute, Washington, D. C.
Sociedad Cientifica Argentina, Buenos Aires, S. A.
State Association of Engineers, Norwich, Conn.
State College, State College, Penna.
State Library of Pennsylvania, Harrisburg, Pa.
Stevens Institute of Technology, Hoboken, N. J.
Svenska Teknologföreningen, Stockholm, Sweden.
Swedish Society of Civil Engineers, Stockholm, Sweden.
Thayer School of C. E., Hanover, New Hampshire.

The Technic, Ann Arbor, Mich.
The Technical Society of the Pacific Coast,
Room 56, Academy of Sciences, San Francisco, Cal.
The Practical Mechanic, Worcester, Mass.
Thompson, B., Box 430, Chattanooga, Tenn.
University of California, Berkeley, Cal.
University of Illinois, Champaign, Illinois.
University of Pennsylvania, Philadelphia, Pa.
United States Geological Survey, Washington, D. C.
Western Society of Engineers, 78 LaSalle St., Chicago, Ill.
Western Railway Club, The Rookery, Chicago, Ill.
Whitman, J. M., Industrial University, Fayetteville, Ark.
Western University of Pennsylvania, Allegheny, Pa.

JOURNALS SUBSCRIBED FOR.

Annalen der Physik ünd Chemie.
Annales des Mines.
American Chemical Journal.
Annales des Ponts et Chaussées.
Analyst, The.
Berg ünd Heüttenmaenische Zeitüng.
Chemiker Zeitüng.
Dingler's Polytechnische Journal.
Electrical Engineer.
Engineering Magazine.
Journal Society Chemical Industry.
La Luminiere Electrique.
Locomotive Engineering.
London Journal of Gas Lighting.
London Electrician.
London Engineering.
London Chemical News.
Scientific American.
Scientific American Supplement.
Wagner's Jahres-Bericht.
Zeitschrift für Analytische Chemie.
Zeitschrift des Instrümentikünde.